# DH-IPC-HDW31659TD-S-IL-BLK

16MP Smart Dual Light Fixed-focal Eyeball WizSense Network Camera



Launched by Dahua Technology, WizSense is a series of AI products and solutions that adopt independent AI chip and deep learning algorithm. It focuses on human and vehicle with high accuracy, enabling users to fast act on defined targets. Based on Dahua's advanced technologies, WizSense provides intelligent, simple and inclusive products and solutions.

## Series Overview

With advanced deep learning algorithm, Dahua WizSense 3 Series network camera supports intelligent functions, such as perimeter protection and smart motion detection. With starlight technology, this series camera provides a better image effect in the condition of low illuminance.

## Functions

### Xinghan Large-Scale AI Models-Vision

Xinghan Large-Scale AI Models-Vision seamlessly expands the storage and operational capacity of algorithmic models through the powerful integration of edge AI model algorithms and NPU computing power. Engineered with a lightweight transformer architecture and enhanced by model distillation and quantization techniques, it optimizes the computing power consumption of ViT operators. This enables the system to collaborate on multiple tasks simultaneously through joint inference between small and large models optimized for edge devices.

### Super AI Coding

With advanced AI object detection and scene recognition technology, Super AI Coding integrates ROI, BAE, and DFE to achieve higher encoding efficiency than H.265 and H.264 while effectively reducing storage and transmission costs without compromising video quality.

- 1/1.8" CMOS image sensor, low luminance, and high definition image.
- Outputs max 16 MP (5440 × 3072)@20 fps.
- H.265 codec, high compression rate, ultra-low bit rate.
- Built-in multi-core light, the max IR distance is 40 m and the max warm light distance is 40 m.
- ROI, Super AI Coding (H.265/H.264), flexible coding, applicable to various bandwidth and storage environments.
- Rotation mode, WDR, 3D NR, HLC, BLC, digital watermarking, applicable to various monitoring scenes.
- Intelligent monitoring: Intrusion, tripwire (the two function support the classification and accurate detection of vehicle and human), stay detection, loitering detection, and face detection (full image).
- Abnormality detection: Motion detection, video tampering, scene changing, audio detection, no SD card, SD card full, SD card error, network disconnection, IP conflict, illegal access, and voltage detection.
- Supports max 512 GB Micro SD card; built-in dual Mic.
- 12 VDC/PoE power supply.
- IP67 protection.
- SMD 4.0.
- Supports one-tap arming and disarming.
- SMD area can be set in warm light areas that support triggering alarms.




### Perimeter Protection

With deep learning algorithm, Dahua Perimeter Protection technology can recognize human and vehicle accurately. In restricted area (such as pedestrian area and vehicle area), the false alarms of intelligent detection based on target type (such as tripwire, intrusion, fast moving, parking detection, loitering detection and gathering detection) are largely reduced.

### Smart Dual Light

Dahua Smart Dual Light technology adopts smart algorithm to detect targets. Usually, the IR illuminator is on at night; when the target appears in the monitoring area, the white light is on, and the camera records the full-color video and information of key events. That is, the camera links snapshot and video with full-color image. When the target is out of the monitoring area, the white light is off and the IR illuminator is on, which reduces light pollution efficiently.

**Protection (IP67, Wide Voltage)**

IP67: The camera passes a series of strict test on dust and soak. It has dust-proof function, and the enclosure can work normally after soaking in 1 m deep water for 30 minutes.

Wide voltage: The camera allows ±30% (for some power supplies) input voltage tolerance (wide voltage range), and it is widely applied to outdoor environment with instable voltage.

## Technical Specification

### Camera

| | |
|---|---|
| Image Sensor | 1/1.8" CMOS |
| Max. Resolution | 5440 (H) × 3072 (V) |
| Scanning System | Progressive |
| Electronic Shutter Speed | Auto/Manual 1/3 s–1/100,000 s |
| Min. Illumination | 0.0006 lux@F1.0 (Color, 30 IRE);<br>0.0003 lux@F1.0 (B/W, 30 IRE);<br>0 lux (Illuminator on) |
| S/N Ratio | >56 dB |
| Illumination Distance | 2.8 mm: Up to 30 m (98.43 ft) (IR);<br>Up to 30 m (98.43 ft) (Warm light)<br>3.6 mm: Up to 40 m (131.23 ft) (IR);<br>Up to 40 m (131.23 ft) (Warm light) |
| Illuminator On/Off Control | Auto;Manual |
| Illuminator Number | 2 (Multi-core (IR + warm) light) |
| Angle Adjustment | Pan: 0°–360°;<br>Tilt: 0°–78°;<br>Rotation: 0°–360° |

### Lens

| | |
|---|---|
| Lens Type | Fixed-focal |
| Lens Mount | M16 |
| Focal Length | 2.8 mm; 3.6 mm |
| Max. Aperture | F1.0 |
| Field of View | 2.8 mm: H: 110°; V: 58°; D: 132°<br>3.6 mm: H: 90°; V: 48°; D: 106° |
| Close Focus Distance | 2.8 mm: 2.5 m (8.20 ft)<br>3.6 mm: 3.7 m (12.14 ft) |

| | Lens | Detect | Observe | Recognize | Identify |
|---|---|---|---|---|---|
| DORI Distance | 2.8 mm | 115.5 m ( 378.94 ft) | 46.2 m ( 151.57 ft) | 23.1 m ( 75.79 ft) | 11.5 m ( 37.73 ft) |
| | 3.6 mm | 136.8 m ( 448.82 ft) | 54.7 m ( 179.46 ft) | 27.4 m ( 89.90 ft) | 13.7 m ( 44.95 ft) |
| | *DORI (Detect, Observe, Recognize, Identify) is a standard system (EN-62676-4) for defining the ability of a person viewing the video to distinguish persons or objects within a covered area. The numbers in this table do not reflect intelligent function distances. For intelligent function distances, refer to installation and commissioning manual/project design tool. | | | | |

### Intelligence

| | |
|---|---|
| EPTZ | Enlarge and track the targets of intelligent alarms |
| IVS (Perimeter Protection) | Intrusion, tripwire (the two functions support the classification and accurate detection of vehicle and human), stay detection, loitering detection. Offers Perimeter Protection Large-Scale AI Models to extend the target detection range and reduce the rate of false alarm. |
| SMD | SMD 4.0 |
| AcuPick | Uses deep learning algorithms and works with back-end devices to accurately match targets, such as people and motor vehicles, and search through live and recorded videos to quickly locate targets. |
| AI SSA | Adopt deep learning algorithms to adjust the parameters of the image to suit the conditions. |
| Face Detection (Full Image) | Face detection; snapshot; snapshot optimization; optimal face snapshot upload; face exposure; face snapshot set as face or one-inch photo; snapshot strategies (real-time snapshot, quality priority and optimization snapshot); face angle filter; optimization time setting. |

### Video

| | |
|---|---|
| Video Compression | H.265; H.264; H.264H; H.264B; MJPEG (Only supported by sub stream) |
| AI Coding | Super AI Coding (H.265); Super AI Coding (H.264)<br>*Includes smart codec technology, Smart H.265+ and Smart H.264+ |
| Video Frame Rate | Main stream: 5440 × 3072@(1–20 fps)/3840 × 2160@(1–25/30 fps);<br>Sub stream: 1920 × 1080@(1–25/30 fps);<br>Third stream: 1920 × 1080@(1–25/30 fps)<br>*The values above are the max frame rates of each stream; for multiple streams, the values will be subjected to the total encoding capacity. |
| Streaming Capability | 3 streams |
| Resolution | 16M (5440 × 3072/5120 × 2880); 12M (4480 × 2512); 8M (3840 × 2160); 6M (3200 × 1800); 5M (3072 × 1728); 4M (2688 × 1520/2560 × 1440); 3M (2304 × 1296); 1080p (1920 × 1080); 720p (1280 × 720); D1 (704 × 576/704 × 480); VGA (640 × 480); CIF (352 × 288/352 × 240) |
| Bit Rate Control | VBR;CBR;ABR |
| Video Bit Rate | H.264: 3 kbps–32 Mbps;<br>H.265: 3 kbps–32 Mbps |
| Day/Night | Auto(ICR)/Color/B/W |
| BLC | Yes |
| HLC | Yes |
| WDR | 120 dB |
| Scene Self-adaptation (SSA) | Yes |
| White Balance | Auto; Natural; Street Lamp; Outdoor; Manual; Regional Custom |
| Gain Control | Manual;Auto |
| Noise Reduction | 3D NR |
| Motion Detection | OFF/ON (4 areas, rectangular) |
| Region of Interest (RoI) | Yes (4 areas) |
| Smart Illumination | Yes |
| Smart Dual Light | Yes |

| | |
|---|---|
| Defog | Electronic |
| Image Rotation | 0°/90°/180°/270° (Supports 90°/270° with 2688 × 1520 resolution and lower) |
| Mirror | Yes |
| Privacy Masking | 8 areas |
| LDC | Yes |

## Audio

| | |
|---|---|
| Built-in MIC | Yes, built-in dual Mic |
| Audio Compression | PCM; G.711a; G.711Mu; G.726; G.723 |

## Alarm

| | |
|---|---|
| Alarm Event | No SD card; SD card full; SD card error; network disconnection; IP conflict; illegal access; motion detection; video tampering; tripwire; intrusion; loitering detection; stay detection; face detection (full image); scene changing; audio detection; voltage detection; SMD; security exception |

## Network

| | |
|---|---|
| Network Port | RJ-45 (10/100/1000 Base-T) |
| SDK and API | Yes |
| Network Protocol | IPv4; IPv6; HTTP; TCP; UDP; ARP; RTP; RTSP; RTCP; RTMP; SMTP; FTP; SFTP; DHCP; DNS; DDNS; QoS; UPnP; NTP; Multicast; ICMP; IGMP; NFS; SAMBA; PPPoE; SNMP; P2P; Bonjour; Auto Registration |
| Interoperability | ONVIF (Profile S & Profile G & Profile T & Profile M); CGI |
| User/Host | 20 (Total bandwidth: 256 M) |
| Storage | FTP; SFTP; Micro SD card (support max. 512 GB); NAS |
| Browser | IE: IE11;<br>Chrome;<br>Firefox |
| Management Software | Smart PSS Lite; DSS; DMSS; DoLynk Care |
| Mobile Client | iOS;Android |
| Security | Digest;WSSE;Account lockout;Security logs;IP/MAC filtering;Generation and importing of X.509 certification;syslog;HTTPS;802.1x;Trusted boot;Trusted execution;Trusted upgrade;Session security;Security warning |

## Certification

| | |
|---|---|
| Certifications | CE-LVD: EN62368-1;<br>CE-EMC: Electromagnetic Compatibility Directive 2014/30/EU |

## Power

| | |
|---|---|
| Power Supply | 12 VDC (±30%); PoE (802.3at) |
| Dual Power Backup | When the power adapter and PoE provide power at the same time, disconnect one of them. The device will continue to work, but will not restart. |
| Power Consumption | Basic: 5.6 W (12 VDC); 7.2 W (PoE);<br>Max.: 14.8 W (12 VDC); 16.8 W (PoE) (H.265 + WDR + warm light + intelligence on) |

## Environment

| | |
|---|---|
| Operating Temperature | –40 °C to +60 °C (–40 °F to +140 °F) |
| Operating Humidity | ≤95% (RH), non-condensing |
| Storage Temperature | –40 °C to +60 °C (–40 °F to +140 °F) |
| Storage Humidity | ≤95% (RH), non-condensing |
| Protection | IP67 |
| Anti-corrosion Level | Basic Protection<br>*The products are designed for general use and are applicable even in areas with no specific requirements for anti-corrosion protection. |

## Structure

| | |
|---|---|
| Casing Material | Metal |
| Product Dimensions | 108 mm × Φ122 mm (4.25" × Φ4.80") |
| Net Weight | 660 g (1.46 lb) |
| Gross Weight | 860 g (1.90 lb) |

## Ordering Information

| Type | Model | Description |
|---|---|---|
| IP CAMERA | DH-IPC-HDW31659TD-S-IL-BLK | 16MP Smart Dual Light Fixed-focal Eyeball WizSense Network Camera |
| Accessories (Optional) | DH-PFA109-B | Mount Adapter |
| | DH-PFB220C-B | Ceiling Mount Bracket |
| | DH-PFB305W-B | Wall Mount Bracket |
| | DH-PFA151-B | Corner Mount Bracket |
| | DH-PFA150-B | Pole Mount Bracket |
| | DH-PFB2203W-B | Wall Mount Bracket |
| | DH-PFA152-E-B | Pole Mount Bracket |
| | DH-PFA130-E-B | Water-proof Junction Box |
| | DH-PFM320-020EN | DC12V 2A Power Adapter |
| | DH-PFM320D-EN | DC12V 2A Power Adapter |
| | PFM900-E | Integrated Mount Tester |
| | DHI-TF-P100/512GB | MicroSD Card |

## Accessories

Optional:



DH-PFA109-B
Mount Adapter



DH-PFB220C-B
Ceiling Mount Bracket



DH-PFB305W-B
Wall Mount Bracket

Optional:



DH-PFA151-B
Corner Mount Bracket



DH-PFA150-B
Pole Mount Bracket



DH-PFB2203W-B
Wall Mount Bracket



DH-PFA152-E-B
Pole Mount Bracket



DH-PFA130-E-B
Water-proof Junction Box



DH-PFM320-020EN
DC12V 2A Power Adapter



DH-PFM320D-EN
DC12V 2A Power Adapter



PFM900-E
Integrated Mount Tester



DHI-TF-P100/512GB
MicroSD Card

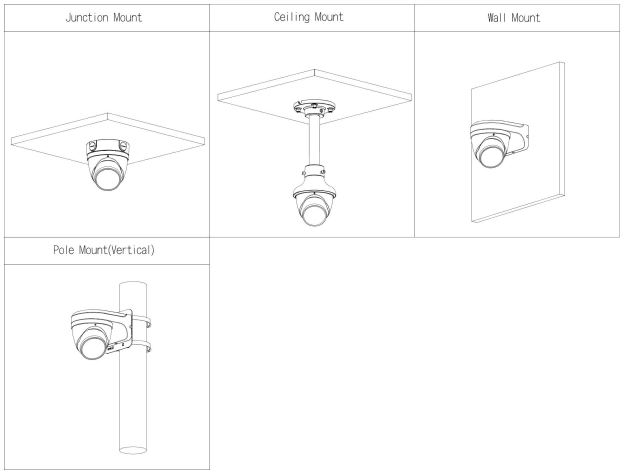


## Dimensions (mm[inch])

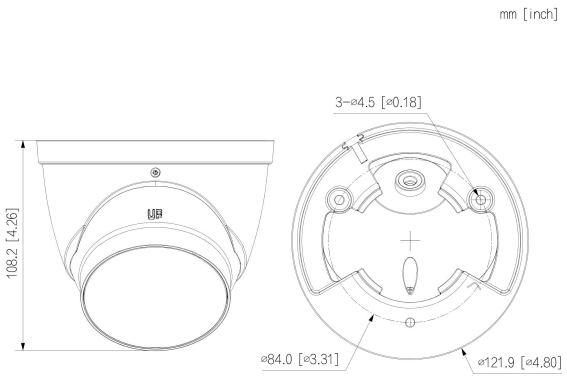


Rev 002.000 ©2026 Dahua. All rights reserved. Design and specifications are subject to change without notice.
Pictures in the document are for reference only, and the actual product shall prevail.