JA-121PW Bus combined PIR+ MW motion detector type: 1PIRMW2302RC

*The product is a component of the **JABLOTRON** system. It is used for spatial detection of movement of people in the interior of buildings. The combination of **PIR** and **MW** makes the detector highly resistant to false alarms. It uses a PIR sensor to detect the movement of people, which is then confirmed by a MW sensor. An alarm is triggered when both sensors are activated. The detector is designed to be installed by a trained technician with a valid Jablotron certificate.* **This product is compatible with JA-103K and JA-107K control panels.**

Installation

During the installation pay attention that there should be no obstacles in the detector's view for proper PIR sensor function. We do not recommend installing the detector close to metal objects – it can cause the influence of microwave field. It is not possible to install two or more detectors in an area MW transmitters could interfere with each other.

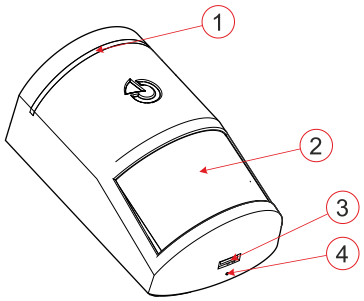

Figure 1: Description of the external parts of the product

***1** – light guide; **2** – PIR sensor lens; **3** – cover latch; **4** – hole for locking screw*

1. Open the detector cover by pressing the latch (3), Do not touch the PIR sensor (11) inside - it may be damaged.
2. Release the PCB by pressing the latch (5) and remove it.
3. Break a hole in the rear plastic for the bus cable.
4. Thread the cable through the prepared hole through the rear plastic and screw the rear plastic to the selected location on the wall (vertically, cover latch down).
5. Insert the PCB into the rear plastic of the detector using the electronics latch (5) and connect the cable to the terminal block (8).

Always connect the bus when the system power is completely off.

6. Please also refer to the installation manual of the control panel. Basic procedure:
   a. When the detector is switched on, the yellow LED (6) starts flashing repeatedly to indicate that it has not been enrolled into the system.
   b. Go to the **F-Link** program, select the required position in the **Devices** tab and launch the enrolment mode by clicking on the Enrol button.
   c. Press the tamper contact in the detector (10) – the detector is thus enrolled, and the yellow LED indicator goes off.
7. Close the detector cover and secure with the locking screw (4).

Notes:

- *Learning can also be done by pressing the tamper contact (10).*
- *The detector can also be learned into the control panel by entering the serial number (9) into the F-Link program. All digits are entered (sample serial number: 1400-00-0000-0001).*
- *To remove a detector from the system, delete it from the appropriate positions in the control panel.*
- *To comply with EN 50131-1, the cover latch (3) must be secured with the supplied locking screw into the prepared hole (4).*

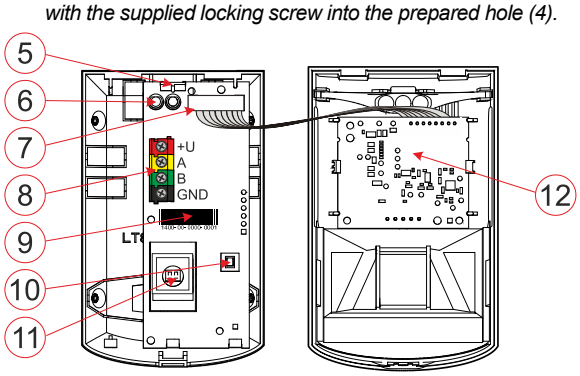

Figure 2: Description of the internal parts of the product

***5** – cover latch; **6** – LED; **7** – connector for MW sensor connection; **8** – bus terminals; **9** – serial number; **10** – tamper contact; **11** – PIR sensor; **12** – MW sensor*

Setting detector properties

The settings are made by the F-Link program, ***Devices*** tab. At the detector position, use the ***Internal Settings*** option *(the yellow LED on the detector lights up)*. A dialogue appears in which the settings can be made (** factory settings*):

LED indication: *turns off*/on* the red light (1) motion optical indication when unset. Always indicates in service mode.

PIR immunity level: determines resistance to false alarms. *The Standard** level combines basic immunity with fast response. The *Enhanced* level provides higher immunity, but the detector responds more slowly.

MW immunity level: determines the level of motion analysis performed by the MW sensor. *Standard** combines basic immunity with fast response. *Increased* level provides higher immunity, but the detector responds more slowly.

MW sensitivity: *100%, 75%*, 50%, 25%.* In some installation cases, the microwave detection is also able to detect movement behind a wall, behind a glass window, plasterboard, etc. Therefore, perform an errand test using the *Test Mode - MW* option and in case of unwanted activations, gradually reduce the sensitivity.

MW activation: *Any way secured* / Fully secured / Always / Never*. The factory default setting is that confirmation of PIR sensor activation by MW detection is enabled when both partially and fully set. In the set state, MW detection is disabled (so the detector activation in the unset state is only from the PIR sensor). By switching the option to *Fully armed*, MW detection is only functional when the section is fully set. When the section is partially set and the section is in the unset state, MW detection is disabled. For the third option *Always*, the MW detection is always activated, namely even in the set state. MW detection confirmation can also be completely disabled with the *Never* option. In this case, the detector behaves like a standard PIR motion detector.

MW only: *YES/NO**. In case of necessity (e.g. narrow long corridors, corridors where PIR detection is unreliable) it is possible to completely disable PIR motion detection. Checking this option will switch the detector to full MW mode.

Testing mode: *the PIR+ MW* and *MW* buttons are used to test the detector in the control panel service mode, when it is necessary to check the detector activations by a walk test. Pressing *the PIR+ MW* button invokes the test mode of the detector as a whole for an errand test in the guarded room. Pressing the *MW* button invokes the test mode for MW detection only to check the sensitivity outside the guarded area, for the prevention of false alarms. In both cases, confirmation of activation is indicated by a red detector signal and an activation signal is sent to the control panel - F-Link diagnostics tab. The MW detection test itself is interrupted either by switching the PIR+MW button or by leaving the internal settings of the detector under test.

Function test

In the control panel service mode, the LED indicates any movement. After leaving the service mode, the detector switches to the operating mode according to the selected parameters of the internal settings. The individual detector activations can also be checked in the **F-Link** program under the ***Diagnostics*** tab**.**

The PIR sensor is factory fitted with a 110° / 12 m lens. The coverage of the area is according to the following picture - white characteristic.

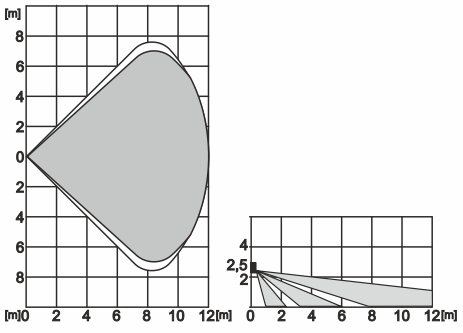

Figure 3: Coverage characteristics

The MW sensor is guaranteed to react to movement from 0 m to 12 m. In certain cases, it can detect motion behind fixed obstacles non-metallic materials (behind a thin wall, door, glass, running water in plastic pipes, etc.).

JABLOTRON a.s.
Pod Skalkou 4567/33 | 46601 | Jablonec n. Nisou
Czech Republic | www.jablotron.com

Due to the principle of operation of the MW part of the detector, the detection characteristics of the MW coverage may vary significantly depending on the size, shape and equipment of the room in which the detector is installed, especially with regard to metallic materials that cause reflections or shielding of the generated MW signal.

Always check the coverage of the guarded area carefully during installation.

Technical parameters

Power	*from the control panel bus 12 V DC (8-15 V)*
Quiescent current consumption	*2 mA*
Maximum current consumption	*8 mA*
Recommended installation height	*2,5 m*
Detection angle / PIR detection coverage	*110 ° / 12 m*
Detection angle / detection coverage MW	*90 ° / 12 m*
Working frequency	*24.125 GHz*
Maximum effective radiated power MW (EIRP)	*<50 mW*
Dimensions	*60 x 98 x 52 mm*
Weight	*85 g*
Classification	*Security level 2 / Environment class II (according to EN 50131-1)*
	Note: With increased immunity against false alarms, EN 50131-1 does not comply.
Environment	*indoor general*
Operating temperature range	*-10 °C to +40 °C*
Average operating humidity	*75% RH, non-condensation*
Certification body	*Trezor Test (No. 3025)*
Meets	*EN IEC 63000, EN 50130-4, EN 55032, EN 50131-1, -2-4, EN IEC 62368-1, EN ETSI 300 440*
Operating conditions according to general authorization	*ERC REC 70-03*
MW Frequency band according to ERC REC 70-03:	*band m)*
ITU designation for MW:	*P0N*
ITU designation for SRD:	*80K0F1DAN*
Recommended screw	*2x ø 3.5 x 40 mm (countersunk head)*

We recommend that you familiarize yourself with the terms and conditions set by local telecommunications authorities.

This detector must not be used in Great Britain as the frequency 24.05-24.15 GHz in this frequency band is allocated for police speed meters. In France, no restrictions for fixed installations, otherwise limited to 0.1 mW e.i.r.p. in 24.10-24.15 GHz. In Russia, fixed installations are permitted with a maximum of 100 mW e.i.r.p., subject to specific installation requirements.

JABLOTRON a.s. declares that the 1PIRMW2302RC product is designed and manufactured in compliance with the harmonisation legislation of the European Union: directives 2014/53/EU, 2014/35/EU, 2014/30/EU, 2011/65/EU, when used as intended. The original Declaration of Conformity is available at www.jablotron.com in the Downloads section.

Note: The product, although it does not contain any harmful materials, do not dispose of it in the garbage, but take it to a electronic waste collection point. For more information, visit www.jablotron.com in the Downloads section.