mm [inch]

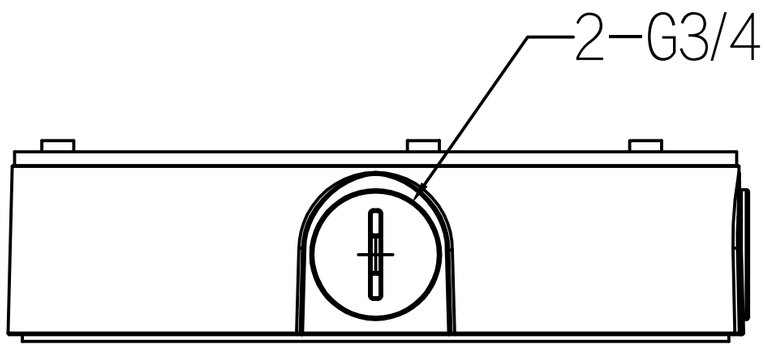
2–G3/4

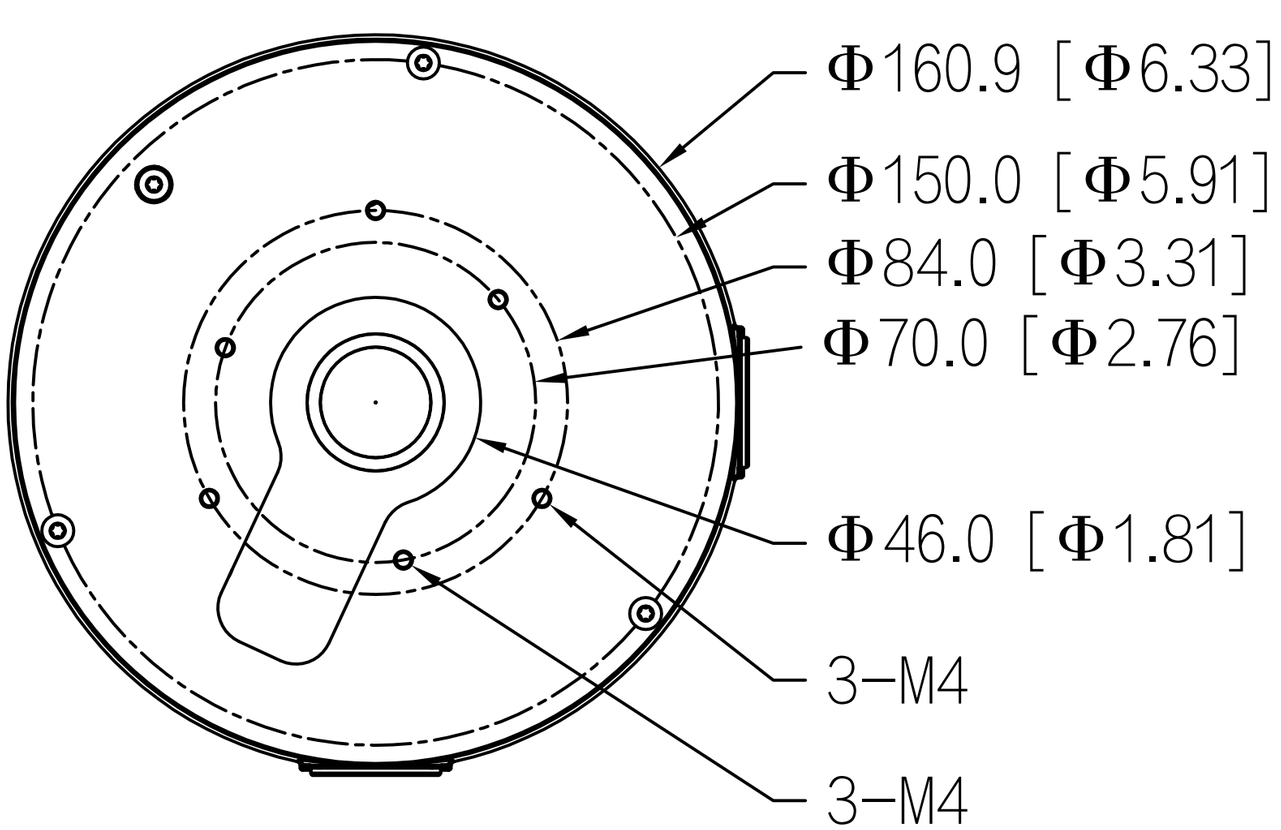
Φ160.9 [Φ6.33]
Φ150.0 [Φ5.91]
Φ84.0 [Φ3.31]
Φ70.0 [Φ2.76]
Φ46.0 [Φ1.81]
3–M4
3–M4

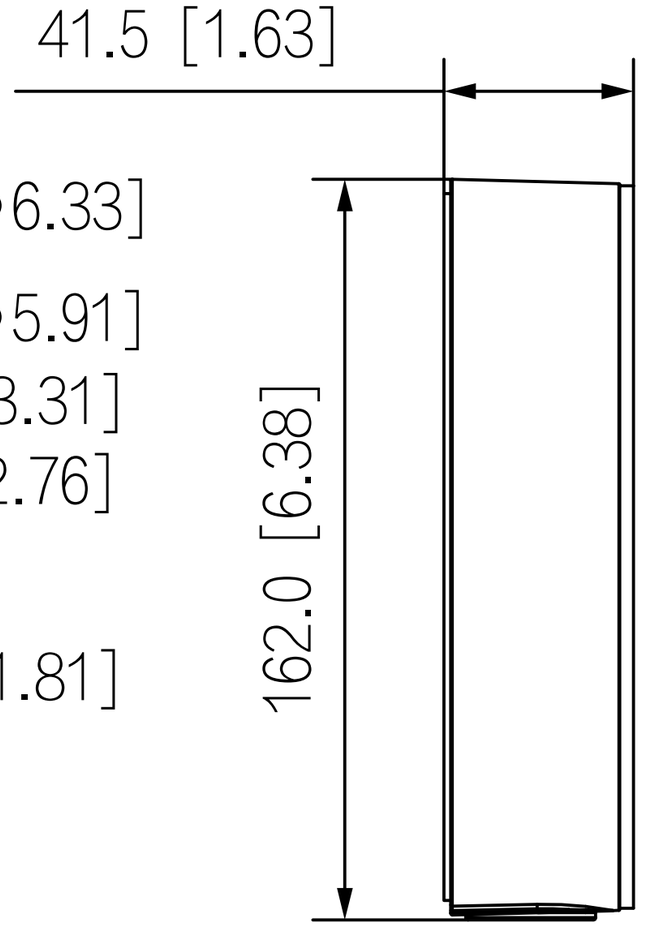
41.5 [1.63]
162.0 [6.38]