DH-IPC-HFW5459E-ASE-IL

4MP Smart Dual Light Fixed-focal Bullet WizMind Network Camera



Launched by Dahua Technology, Dahua WizMind is a full portfolio of solutions composed of project-oriented products including IPC, IVSS,NVR, PTZ, XVR, Thermal and software platform which adopts industry-leading deep learning algorithms. Focusing on customer's requirements, WizMind provides precise, reliable and comprehensive AI solutions for verticals.

Series Overview

With its deep learning algorithms, the WizMind 5 Series camera offers advanced analytical capabilities for both audio and video. It integrates intelligent features such as video metadata, AcuPick, face detection, perimeter protection, and people counting. Powered by the Xinghan Large-Scale AI Models-Vision, the camera excels in object detection, recognition, and scene adaptation. Equipped with AI-ISP imaging technology, it offers enhanced night vision performance. The series is designed for durability, being dust-proof, waterproof, and vandal-proof, in compliance with IP67 and IK10 standards, though support for these certifications may vary across models.

Functions

Xinghan Large-Scale AI Models-Vision

Xinghan Large-Scale AI Models-Vision seamlessly expands the storage and operational capacity of algorithmic models through the powerful integration of edge AI model algorithms and NPU computing power. Engineered with a lightweight transformer architecture and enhanced by model distillation and quantization techniques, it optimizes the computing power consumption of ViT operators. This enables the system to collaborate on multiple tasks simultaneously through joint inference between small and large models optimized for edge devices.

Self-Learning

Empowered by deep learning technology, the device recognizes different types of targets and their statuses through learning and analyzing target features to detect targets and filter out false alarms.

- 4-MP 1/1.8" CMOS image sensor, low luminance, and high definition image.
- Outputs max. 4 MP (2688 × 1520) @25/30 fps.
- Built-in multi-core light, the max. IR distance is 50 m and the max. warm light distance is 50 m.
- ROI, SVC, SMART H.264+/H.265+, AI H.264/H.265, encoding after filter, flexible coding, applicable to various bandwidth and storage environments.
- Rotation mode, WDR, 3D NR, HLC, BLC, digital watermarking, applicable to various monitoring scenes.
- Powered by the Xinghan Large-Scale AI Models-Vision, the camera outstandingly delivers on its object detection, recognition, and scene adaptation functions.
- With deep learning algorithm, it supports: AcuPick, video metadata, IVS, face detection, Smart Object Detection,and people counting, etc.
- Alarm: 1 in, 1 out; audio: 1 in, 1 out; supports max. 1 TB Micro SD card; built-in Mic
- 12 VDC/PoE power supply; ePoE
- IP67 protection.

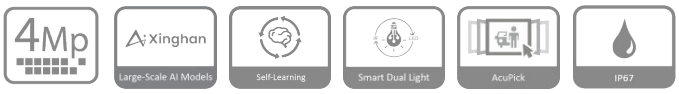

Smart Dual Light

Dahua Smart Dual Light technology adopts smart algorithm to detect targets. Usually, the IR illuminator is on at night; when the target appears in the monitoring area, the white light is on, and the camera records the full-color video and information of key events. That is, the camera links snapshot and video with full-color image. When the target is out of the monitoring area, the white light is off and the IR illuminator is on, which reduces light pollution efficiently.

AcuPick

This industry-leading search technology effectively utilizes both front-end and back-end intelligence to help with searching through massive video data to quickly and conveniently locate targets with greater precision.

Protection (IP67, Wide Voltage)

IP67: The camera passes a series of strict test on dust and soak. It has dust-proof function, and the enclosure can work normally after soaking in 1 m deep water for 30 minutes. Wide voltage: The camera allows ±30% (for some power supplies) input voltage tolerance (wide voltage range), and it is widely applied to outdoor environment with instable voltage.

Technical Specification

Camera

Image Sensor	1/1.8" CMOS
Max. Resolution	2688 (H) × 1520 (V)
ROM	4 GB
RAM	2 GB
Scanning System	Progressive
Electronic Shutter Speed	Auto/Manual 1/3 s–1/100,000 s
Min. Illumination	0.0007 lux@F1.6(Color, 30IRE) 0.0004 lux@F1.6 (B/W, 30IRE) 0 lux (Illuminator on)
S/N Ratio	>56 dB
Illumination Distance	Up to 50 m (164.04 ft) (IR) Up to 50 m (164.04 ft) (Warm light)
Illuminator On/Off Control	Auto;Manual
Illuminator Number	2 (Multi-core (IR + warm) light)
Angle Adjustment	Pan: 0°–360° Tilt: 0°–90° Rotation: 0°–360°

Lens

Lens Type	Fixed-focal
Lens Mount	M12
Focal Length	2.8 mm; 3.6 mm; 6 mm
Max. Aperture	F1.6
Field of View	2.8 mm: H: 112°; V: 58°; D: 137° 3.6 mm: H: 89°; V: 51°; D: 101° 6 mm: H: 60°; V: 35°; D: 68°
Iris Control	Fixed
Close Focus Distance	2.8 mm: 1.5 m (4.92 ft) 3.6 mm: 2 m (6.56 ft) 6 mm: 2.5 m (8.20 ft)

	Lens	Detect	Observe	Recognize	Identify
DORI Distance	2.8 mm	61.5 m (201.77 ft)	24.6 m (80.71 ft)	12.3 m (40.35 ft)	6.2 m (20.34 ft)
	3.6 mm	67.6 m (221.78 ft)	27.0 m (88.58 ft)	13.5 m (44.29 ft)	6.8 m (22.31 ft)
	6 mm	96.6 m (316.93 ft)	38.6 m (126.64 ft)	19.3 m (63.32 ft)	9.7 m (31.82 ft)
	*DORI (Detect, Observe, Recognize, Identify) is a standard system (EN-62676-4) for defining the ability of a person viewing the video to distinguish persons or objects within a covered area. The numbers in this table do not reflect intelligent function distances. For intelligent function distances, refer to installation and commissioning manual/project design tool.				

Intelligence

IVS (Perimeter Protection)	Intrusion, tripwire, fast moving (the three functions support the classification and accurate detection of human,vehicle, animal and Other); loitering detection, people gathering, parking detection, stay detection. Offers Perimeter Protection Large-Scale AI Models to extend the target detection range and reduce the rate of false alarm. Supports self-learning, it filters out false alarms.
Smart Object Detection	Smart Abandoned Object and Smart Missing Object. With Smart Object Detection Large-Scale AI Models, a wider range of objects is supported.
SMD	SMD 4.0
AcuPick	Uses deep learning algorithms and works with back-end devices to accurately match targets, such as people, animal and motor vehicles, and search through live and recorded videos to quickly locate targets.
AI SSA	Yes
Face Detection	Face detection; snapshot; snapshot optimization; optimal face snapshot upload; face enhancement; face exposure; face attributes extraction including 6 attributes and 8 expressions; face snapshot set as face, one-inch photo or custom; snapshot strategies (real-time snapshot, quality priority and optimization snapshot); face angle filter; optimization time setting.
People Counting	Tripwire people counting, generating and exporting report (day/week/month/year); people counting in area and queue management, generating and exporting report (day/week/month); 4 rules can be set for tripwire, people counting in area and queue management.
Heat Map	Yes
Video Metadata	Motor vehicle, non-motor vehicle, face, and human body detection; snapshot; snapshot optimization; optimal face snapshot upload. Extraction of motor vehicle and non-motor vehicle attributes: extracts 6 attributes for motor vehicle and 6 attributes for non-motor vehicle. Extraction of face and human body attributes: extracts 6 attributes for face and 8 attributes for human body.
Smart Search	Work together with Smart NVR to perform refine intelligent search, event extraction and merging to event videos

Video

Video Compression	H.265; H.264; H.264H; H.264B; MJPEG (Only supported by the sub stream)
AI Coding	AI H.265; AI H.264 *Includes smart codec technology, Smart H.265+ and Smart H.264+.
Video Frame Rate	Main stream: 2688 × 1520 (1 fps–25/30 fps)/1920 × 1080@(1 fps–50/60 fps) Sub stream: 704 × 576@(1 fps –25 fps)/704 × 480@(1 fps–30 fps) Third stream: 1920 × 1080@(1 fps–25/30 fps) Fourth stream: 1280 × 720@(1 fps–25/30 fps) *The values above are the max. frame rates of each stream; for multiple streams, the values will be subjected to the total encoding capacity.
Streaming Capability	4 streams
Resolution	4M (2688 × 1520/2560 × 1440); 3M (2048 × 1536/2304 × 1296); 1080p (1920 × 1080); 1.3M (1280 × 960); 720p (1280 × 720); D1 (704 × 576/704 × 480); VGA (640 × 480); CIF (352 × 288/352 × 240)
Bit Rate Control	VBR;CBR
Video Bit Rate	H.264: 3 kbps–16384 kbps H.265: 3 kbps–16384 kbps
Day/Night	Auto(ICR)/Color/B/W
BLC	Yes
HLC	Yes
WDR	140 dB

Scene Self-adaptation (SSA)	Yes
White Balance	Auto; natural; street lamp; outdoor; manual; regional custom
Gain Control	Auto/Manual
Noise Reduction	3D NR
Motion Detection	OFF/ON (4 areas, rectangular)
Region of Interest (RoI)	Yes (4 areas)
Smart Illumination	Yes
Smart Dual Light	Yes
Defog	Yes
Image Rotation	0°/90°/180°/270° (Support 90°/270° with 4M (2688 × 1520) resolution and lower)
Mirror	Yes
Privacy Masking	4 mosaics or 8 color blocks
LDC	Yes

Audio

Built-in MIC	Yes, built-in Mic
Audio Compression	G.711a; G.711Mu; PCM; G.726; G.723

Alarm

Alarm Event	No SD card; SD card full; SD card error; network disconnection; IP conflict; illegal access; motion detection; video tampering; tripwire; intrusion; fast moving; abandoned object; missing object; loitering detection; people gathering; parking detection; scene changing; audio detection; voltage detection; external alarm; face detection; video metadata; SMD; people counting in area; stay detection; people counting; people number error detection; queue people number alarm; queue time alarm; security exception

Network

Network Port	RJ-45 (10/100 Enhancement Base-T)
SDK and API	Yes
Network Protocol	IPv4; IPv6; HTTP; TCP; UDP; ARP; RTP; RTSP; RTCP; RTMP; SMTP; FTP; SFTP; DHCP; DNS; DDNS; QoS; UPnP; NTP; Multicast; ICMP; IGMP; NFS; SAMBA; PPPoE; SNMP; P2P; Auto Registration
Interoperability	ONVIF (Profile S & Profile G & Profile T & Profile M); CGI
User/Host	20 (Total bandwidth: 80 M)
Storage	FTP; SFTP; Micro SD card (support max. 1 TB); NAS
Browser	IE: IE 11 and later Chrome: Chrome 102 and later Firefox: Firefox 88 and later
Management Software	DSS; DMSS; DoLynk Care
Mobile Client	iOS;Android
Security	Digest;WSSE;Account lockout;Security logs;IP/MAC filtering;Generation and importing of X.509 certification;syslog;HTTPS;802.1x;Trusted boot;Trusted execution;Trusted upgrade;Session security;Security warning;SSL/TLS1.3

Function

Sound Warning	Offers 11 sound alarms and supports importing 10 custom sound alarms. Sound: 0–100 Play times can be set from 1 to 10.

Certification

Certifications	CE-LVD: EN62368-1; CE-EMC: Electromagnetic Compatibility Directive 2014/30/EU;

Port

Audio Input	1 channel (RCA port)
Audio Output	1 channel (RCA port)
Alarm Input	1 channel in: wet contact, 5 mA 3–5 VDC
Alarm Output	1 channel out: wet contact, 300 mA 12 VDC

Power

Power Supply	12 VDC (±30%); PoE+ (802.3at); ePoE
Dual Power Backup	When the power adapter and PoE provide power at the same time, disconnect one of them. The device will continue to work, but will not restart.
Power Consumption	Basic: 4.1 W (12 VDC); 6.1 W (PoE) Max(H.265 + WDR+ warm light + intelligence on): 13.2 W (12 VDC); 15.5 W (PoE)
ePoE	Yes

Environment

Operating Temperature	–40 °C to +60 °C (–40 °F to +140 °F)
Operating Humidity	≤95% (RH), non-condensing
Storage Temperature	–40 °C to +60 °C (–40 °F to +140 °F)
Storage Humidity	≤95% (RH), non-condensing
Protection	IP67

Structure

Casing Material	Metal
Product Dimensions	192.7 mm × 70.5 mm × 66.4 mm (7.59" × 2.78" × 2.61") (L × W × H)
Net Weight	610 g (1.34 lb)
Gross Weight	770 g (1.70 lb)

Ordering Information

Type	Model	Description
IP CAMERA	DH-IPC-HFW5459E-ASE-IL	4MP Smart Dual Light Fixed-focal Bullet WizMind Network Camera

Type	Model	Description
Accessories (Optional)	DH-PFA151	Corner Mount Bracket
	DH-PFA130-E	Water-proof Junction Box
	G3416GW	G3/4" Water Joint
	DH-PFA152-E	Pole Mount Bracket
	DH-PFA134	Junction Box
	DH-PFM320D-EN	DC12V2A power adapter
	PFM900-E	Integrated Mount Tester
	DHI-TF-P100/1TB	MicroSD Card

Accessories

Optional:



DH-PFA130-E
Water-proof Junction Box



DH-PFA134
Junction Box



DH-PFA151
Corner Mount Bracket



DH-PFA152-E
Pole Mount Bracket



DH-PFM320D-EN
DC12V2A power adapter



DHI-TF-P100/1TB
MicroSD Card



G3416GW
G3/4" Water Joint



PFM900-E
Integrated Mount Tester

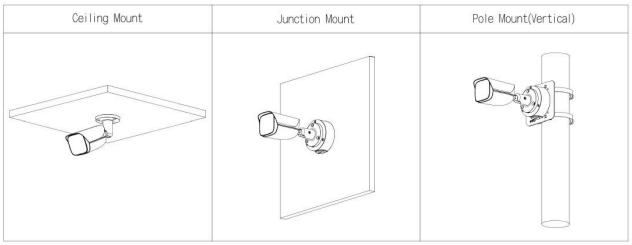

Dimensions (mm[inch])

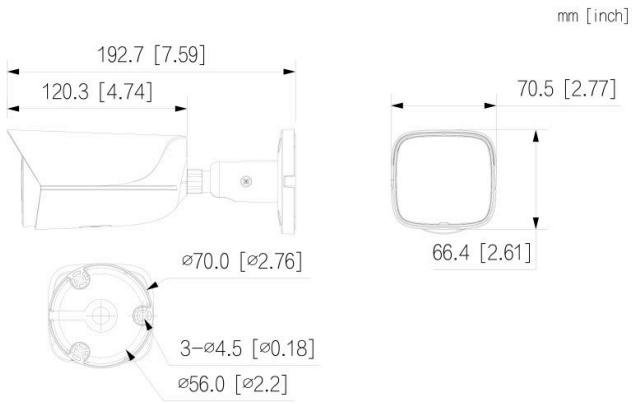

Rev 002.000 © 2025 Dahua. All rights reserved. Design and specificatons are subject to change without notce.
Pictures in the document are for reference only, and the actual product shall prevail.