DH-IPC-HDBW31659R-AS-IL

16MP Smart Dual Light Fixed-focal Dome WizSense Network Camera



Launched by Dahua Technology, WizSense is a series of AI products and solutions that adopt independent AI chip and deep learning algorithm. It focuses on human and vehicle with high accuracy, enabling users to fast act on defined targets. Based on Dahua's advanced technologies, WizSense provides intelligent, simple and inclusive products and solutions.

Series Overview

With advanced deep learning algorithm, Dahua WizSense 3 Series network camera supports intelligent functions, such as perimeter protection and smart motion detection. With starlight technology, this series camera provides a better image effect in the condition of low illuminance.

Functions

Xinghan Large-Scale AI Models-Vision

Xinghan Large-Scale AI Models-Vision seamlessly expands the storage and operational capacity of algorithmic models through the powerful integration of edge AI model algorithms and NPU computing power. Engineered with a lightweight transformer architecture and enhanced by model distillation and quantization techniques, it optimizes the computing power consumption of ViT operators. This enables the system to collaborate on multiple tasks simultaneously through joint inference between small and large models optimized for edge devices.

Super AI Coding

With advanced AI object detection and scene recognition technology, Super AI Coding integrates ROI, BAE, and DFE to achieve higher encoding efficiency than H.265 and H.264 while effectively reducing storage and transmission costs without compromising video quality.

- 1/1.8" CMOS image sensor, low luminance, and high definition image.
- Outputs max 16 MP (5440 × 3072)@20 fps.
- H.265 codec, high compression rate, ultra-low bit rate.
- Built-in multi-core light, the max IR distance is 40 m and the max warm light distance is 40 m.
- ROI, Super AI Coding (H.265/H.264), flexible coding, applicable to various bandwidth and storage environments.
- Rotation mode, WDR, 3D NR, HLC, BLC, digital watermarking, applicable to various monitoring scenes.
- Intelligent monitoring: Intrusion, tripwire (the two function support the classification and accurate detection of vehicle and human), stay detection, loitering detection, and face detection (full image).
- Abnormality detection: Motion detection, video tampering, scene changing, audio detection, no SD card, SD card full, SD card error, network disconnection, IP conflict, illegal access, and voltage detection.
- Alarm: 1 in, 1 out; audio: 1 in, 1 out; supports max 512 GB Micro SD card; built-in dual Mic.
- 12 VDC/PoE power supply.
- IP67 and IK10 protection.
- SMD 4.0.
- Supports one-tap arming and disarming.
- SMD area can be set in warm light areas that support triggering alarms.



Perimeter Protection

With deep learning algorithm, Dahua Perimeter Protection technology can recognize human and vehicle accurately. In restricted area (such as pedestrian area and vehicle area), the false alarms of intelligent detection based on target type (such as tripwire, intrusion, fast moving, parking detection, loitering detection and gathering detection) are largely reduced.

Smart Dual Light

Dahua Smart Dual Light technology adopts smart algorithm to detect targets. Usually, the IR illuminator is on at night; when the target appears in the monitoring area, the white light is on, and the camera records the full-color video and information of key events. That is, the camera links snapshot and video with full-color image. When the target is out of the monitoring area, the white light is off and the IR illuminator is on, which reduces light pollution efficiently.

Protection (IP67, IK10, Wide Voltage)

IP67: The camera passes a series of strict test on dust and soak. It has dust-proof function, and the enclosure can work normally after soaking in 1 m deep water for 30 minutes.

IK10: The enclosure can stand the punch more than 5 times from a 5 kg hammer falling from a height of 40 cm (Impact energy is 20J).

Wide voltage: The camera allows ±30% (for some power supplies) input voltage tolerance (wide voltage range), and it is widely applied to outdoor environment with instable voltage.

Technical Specification

Camera

Image Sensor	1/1.8" CMOS
Max. Resolution	5440 (H) × 3072 (V)
Scanning System	Progressive
Electronic Shutter Speed	Auto/Manual 1/3 s–1/100,000 s
Min. Illumination	0.0006 lux@F1.0 (Color, 30 IRE); 0.0003 lux@F1.0 (B/W, 30 IRE); 0 lux (Illuminator on)
S/N Ratio	>56 dB
Illumination Distance	2.8 mm: Up to 30 m (98.43 ft) (IR); Up to 30 m (98.43 ft) (Warm light) 3.6 mm: Up to 40 m (131.23 ft) (IR); Up to 40 m (131.23 ft) (Warm light)
Illuminator On/Off Control	Auto;Manual
Illuminator Number	4 (Multi-core (IR + warm) light)
Angle Adjustment	Pan: 0°–355°; Tilt: 0°–80°; Rotation: 0°–355°

Lens

Lens Type	Fixed-focal
Lens Mount	M16
Focal Length	2.8 mm; 3.6 mm
Max. Aperture	F1.0
Field of View	2.8 mm: H: 110°; V: 58°; D: 132° 3.6 mm: H: 90°; V: 48°; D: 106°
Close Focus Distance	2.8 mm: 2.5 m (8.20 ft) 3.6 mm: 3.7 m (12.14 ft)

	Lens	Detect	Observe	Recognize	Identify
DORI Distance	2.8 mm	115.5 m (378.94 ft)	46.2 m (151.57 ft)	23.1 m (75.79 ft)	11.5 m (37.73 ft)
	3.6 mm	136.8 m (448.82 ft)	54.7 m (179.46 ft)	27.4 m (89.90 ft)	13.7 m (44.95 ft)
	*DORI (Detect, Observe, Recognize, Identify) is a standard system (EN-62676-4) for defining the ability of a person viewing the video to distinguish persons or objects within a covered area. The numbers in this table do not reflect intelligent function distances. For intelligent function distances, refer to installation and commissioning manual/project design tool.				

Intelligence

EPTZ	Enlarge and track the targets of intelligent alarms
IVS (Perimeter Protection)	Intrusion, tripwire (the two functions support the classification and accurate detection of vehicle and human), stay detection, loitering detection. Offers Perimeter Protection Large-Scale AI Models to extend the target detection range and reduce the rate of false alarm.
SMD	SMD 4.0
AcuPick	Uses deep learning algorithms and works with back-end devices to accurately match targets, such as people and motor vehicles, and search through live and recorded videos to quickly locate targets.
AI SSA	Adopt deep learning algorithms to adjust the parameters of the image to suit the conditions.
Face Detection (Full Image)	Face detection; snapshot; snapshot optimization; optimal face snapshot upload; face exposure; face snapshot set as face or one-inch photo; snapshot strategies (real-time snapshot, quality priority and optimization snapshot); face angle filter; optimization time setting.

Video

Video Compression	H.265; H.264; H.264H; H.264B; MJPEG (Only supported by sub stream)
AI Coding	Super AI Coding (H.265); Super AI Coding (H.264) *Includes smart codec technology, Smart H.265+ and Smart H.264+
Video Frame Rate	Main stream: 5440 × 3072@(1–20 fps)/3840 × 2160@(1–25/30 fps); Sub stream: 1920 × 1080@(1–25/30 fps); Third stream: 1920 × 1080@(1–25/30 fps) *The values above are the max frame rates of each stream; for multiple streams, the values will be subjected to the total encoding capacity.
Streaming Capability	3 streams
Resolution	16M (5440 × 3072/5120 × 2880); 12M (4480 × 2512); 8M (3840 × 2160); 6M (3200 × 1800); 5M (3072 × 1728); 4M (2688 × 1520/2560 × 1440); 3M (2304 × 1296); 1080p (1920 × 1080); 720p (1280 × 720); D1 (704 × 576/704 × 480); VGA (640 × 480); CIF (352 × 288/352 × 240)
Bit Rate Control	VBR;CBR;ABR
Video Bit Rate	H.264: 3 kbps–32 Mbps; H.265: 3 kbps–32 Mbps
Day/Night	Auto(ICR)/Color/B/W
BLC	Yes
HLC	Yes
WDR	120 dB
Scene Self-adaptation (SSA)	Yes
White Balance	Auto; natural; street lamp; outdoor; manual; regional custom
Gain Control	Manual;Auto
Noise Reduction	3D NR
Motion Detection	OFF/ON (4 areas, rectangular)
Region of Interest (RoI)	Yes (4 areas)
Smart Illumination	Yes

Smart Dual Light	Yes
Defog	Electronic
Image Rotation	0°/90°/180°/270° (Supports 90°/270° with 2688 × 1520 resolution and lower)
Mirror	Yes
Privacy Masking	8 areas
LDC	Yes

Audio

Built-in MIC	Yes, built-in dual Mic
Audio Compression	PCM; G.711a; G.711Mu; G.726; G.723

Alarm

Alarm Event	No SD card; SD card full; SD card error; network disconnection; IP conflict; illegal access; motion detection; video tampering; tripwire; intrusion; loitering detection; stay detection; face detection (full image); scene changing; audio detection; voltage detection; defocus detection; external alarm; SMD; security exception

Network

Network Port	RJ-45 (10/100/1000 Base-T)
SDK and API	Yes
Network Protocol	IPv4; IPv6; HTTP; TCP; UDP; ARP; RTP; RTSP; RTCP; RTMP; SMTP; FTP; SFTP; DHCP; DNS; DDNS; QoS; UPnP; NTP; Multicast; ICMP; IGMP; NFS; SAMBA; PPPoE; SNMP; P2P; Bonjour; Auto Registration
Interoperability	ONVIF (Profile S & Profile G & Profile T & Profile M); CGI
User/Host	20 (Total bandwidth: 256 M)
Storage	FTP; SFTP; Micro SD card (support max 512 GB); NAS
Browser	IE: IE11; Chrome; Firefox
Management Software	Smart PSS Lite; DSS; DMSS; DoLynk Care
Mobile Client	iOS;Android
Security	Digest;WSSE;Account lockout;Security logs;IP/MAC filtering;Generation and importing of X.509 certification;syslog;HTTPS;802.1x;Trusted boot;Trusted execution;Trusted upgrade;Session security;Security warning

Certification

Certifications	CE-LVD: EN62368-1; CE-EMC: Electromagnetic Compatibility Directive 2014/30/EU

Port

Audio Input	1 channel (RCA port)
Audio Output	1 channel (RCA port)
Alarm Input	1 channel in: supports wet contact connection (max load 5 mA 3–5 VDC); supports dry contact connection
Alarm Output	1 channel out: wet contact, max load 300 mA 12 VDC

Power

Power Supply	12 VDC (±30%); PoE (802.3at)
Dual Power Backup	When the power adapter and PoE provide power at the same time, disconnect one of them. The device will continue to work, but will not restart.
Power Consumption	Basic: 5.6 W (12 VDC); 7.4 W (PoE); Max.: 15.7 W (12 VDC); 18.1 W (PoE) (H.265 + WDR + warm light + intelligence on)

Environment

Operating Temperature	–40 °C to +60 °C (–40 °F to +140 °F)
Operating Humidity	≤95% (RH), non-condensing
Storage Temperature	–40 °C to +60 °C (–40 °F to +140 °F)
Storage Humidity	≤95% (RH), non-condensing
Protection	IP67; IK10
Anti-corrosion Level	Basic Protection *The products are designed for general use and are applicable even in areas with no specific requirements for anti-corrosion protection.

Structure

Casing Material	Metal
Product Dimensions	94 mm × Φ122.0 mm (3.70" × Φ4.80")
Net Weight	560 g (1.23 lb)
Gross Weight	740 g (1.63 lb)

Ordering Information

Type	Model	Description
IP CAMERA	DH-IPC-HDBW31659R-AS-IL	16MP Smart Dual Light Fixed-focal Dome WizSense Network Camera
Accessories (Optional)	DH-PFB220C	Ceiling Mount Bracket
	DH-PFA109	Mount Adapter
	DH-PFB305W	Wall Mount Bracket
	DH-PFA151	Corner Mount Bracket
	DH-PFA150	Pole Mount Bracket
	DH-PFA156	Pole Mount Bracket
	DH-PFB2203W	Wall Mount Bracket
	DH-PFA137	Junction Box
	DH-PFB5203C	In-ceiling Mount Bracket
	DH-PFM320-020EN	DC12V 2A Power Adapter
	DH-PFM320D-EN	DC12V 2A Power Adapter
	PFM900-E	Integrated Mount Tester
	DHI-TF-P100/512GB	MicroSD Card

Accessories

Optional:



DH-PFB220C
Ceiling Mount Bracket



DH-PFA109
Mount Adapter



DH-PFB305W
Wall Mount Bracket



DH-PFA151
Corner Mount Bracket



DH-PFA150
Pole Mount Bracket



DH-PFA156
Pole Mount Bracket



DH-PFB2203W
Wall Mount Bracket



DH-PFA137
Junction Box



DH-PFB5203C
In-ceiling Mount Bracket



DH-PFM320-020EN
DC12V 2A Power Adapter



DH-PFM320D-EN
DC12V 2A Power Adapter



PFM900-E
Integrated Mount Tester



DHI-TF-P100/512GB
MicroSD Card

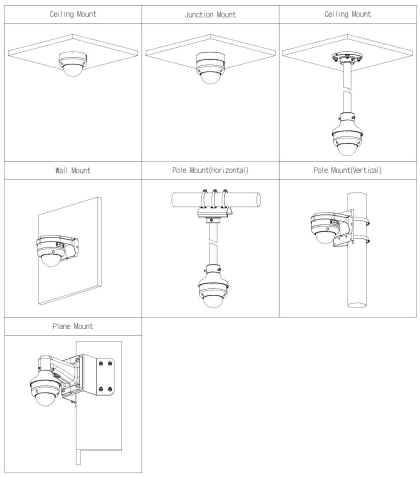

Dimensions (mm[inch])

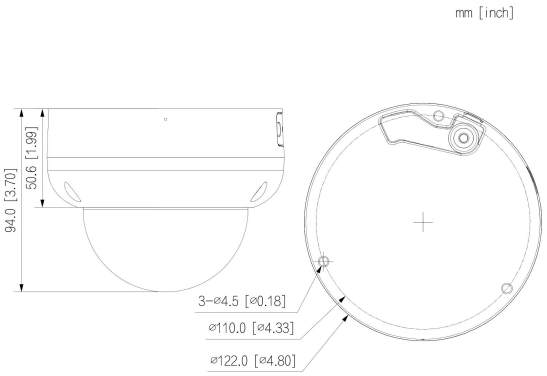

Rev 002.000 ©2026 Dahua. All rights reserved. Design and specifications are subject to change without notice.
Pictures in the document are for reference only, and the actual product shall prevail.