DHI-LPH75-ST420

75 inch Smart interactive whiteboard



- 75-inch 4K DLED display with Zero Air Gap technology that delivers a clear image in sharp, vivid colors. Wireless screen sharing from multiple devices with an intuitive, easy-to-use system.
- 8 physical front buttons for quick access to functions. Smooth writing experience, and AI recognition of drawings. Quick file sharing by scanning a QR code, with easy file encryption for added privacy and security.
- Switches between Android and Windows, and OPS module is optional.

Series Overview

Dahua DeepHub Smart Interactive Whiteboard for education has powerful processing capabilities with its 4-core CPU and up to 8 GB RAM64G storage capacity. Equipped with a high-precision infrared frame with a 2 mm identification diameter, and a 4K high-definition DLED module, this whiteboard will give you an extraordinary experience with writing, controlling the whiteboard and displaying content on it. It features video conferencing, wireless screen sharing, file management, HD display, scan & go, and more AI functions to enhance your experience. You can rely on this whiteboard to modernize your meeting rooms and classrooms.

Functions

4K HD Display

With up to 3840 × 2160 resolution, the 4K HD display delivers a clear image in sharp, vivid colors.

AI Recognition of Drawings

Identifies hand-drawn structures such as straight lines, arrow-straight lines, arrow-dotted lines, triangles, parallelograms, trapezoids, rectangles, pentagons, circles, cylinders, pentagrams, semicircles, and ellipse.

File Management

Supports managing and using Office files, image, video and audio files, and file formats such as PDF and TXT.

Screen Down Reachability

The system supports pulling down the screen to 1/3 the full height, to place the entire screen at a reachable distance for you.

Screen Sharing

The content on your screen can be freely shared with one other device through a wired connection.

Wireless Screen Sharing

In addition to basic file sharing, the device offers wireless screen sharing, interactive operations between two screens, and reverse transmissions. It also supports screen grouping (multiple transmission), host mode (for overall permission control), real-time transmission of images, videos and audios from the wireless camera of the mobile phone to the device, and split-screen mode that displays up to 9 splits on the same screen.

Hidden Antenna Design

The Wi-Fi and hotspot antenna is neatly concealed in the front of the device, ensuring the stability of the signal strength when using a flush mount, and giving the device its simple and sleek appearance.

Similar to Real Writing Experience

The electronic whiteboard supports pen-point writing. It comes equipped with specialized pressure-sensitive writing pens, designed to enhance the writing experience. With its soft, comfortable nib, writing on the whiteboard feels natural, similar to the real writing experience.

Scene

The whiteboard is ideal for indoor sites such as classrooms and meeting rooms.

Technical Specification

Built-in System

Operating System	Android 14
CPU	Quad-core A55
CPU Frequency	1.9 GHz
GPU	ARM Mali-G52 MP2 (2EE)
RAM	8 GB
ROM	32 GB

LCD Panel

Panel Dimensions	75 inch
Backlight	DLED
Aspect Ratio	16:9
Brightness	400 cd/m² (typ.)
Static Contrast	VA: 4000; IPS: 1200
Resolution	3840 (H) × 2160 (V)
Viewing Angle	178° (H); 178° (V)
Lifespan	50,000 hrs
Display Color	1.07 Billion colors (10 Bit)
Response Time	8 ms (typ.)
Refresh Rate	60 Hz

Device Ports

Light Sensor	Yes
Front Button	8 buttons: Whiteboard, volume, curtain, touch lock, signal source, navigation bar, homepage, power supply
Front Ports	1 × Type -C 1 × HDMI IN 1 × USB Touch 2 × USB 3.2 Gen1 Type-A 1 × 3.5 mm Mic in 1 × Type-C (DP IN (4K@60 fps) + USB 3.0 Host+USB 2.0 device (touch) + PD 65 W); supports wired network sharing
Rear Port	1 × Type -C 2 × HDMI IN (4K@60 Hz) 1 × VGA IN 1 × HDMI OUT (4K@60 Hz) 3 × USB Touch 2 × USB3.2 Gen1 Type-A Audio In: 1 × 3.5 mm Line In Audio Out: 1 × SPDIF and 1 × 3.5 mm Line out RS-232: 1 × DB9 port Micro: 1 × USB 2 × RJ-45 1 × OPS slot
Wi-Fi	Yes
Wi-Fi Standard	802.11b/g/n/a/ac/ax
Wi-Fi Frequency Range	2.4 GHz/5 GHz
MAX Power Transmission (Wi-Fi)	CE EIRP: ≤20 dBm@2400–2483.5 MHz; ≤23 dBm@5150–5250 MHz; ≤20 dBm@5250–5350 MHz; ≤27 dBm@5470–5725 MHz; ≤14 dBm@5725–5850 MHz
Bluetooth	Yes
Bluetooth Standard	EDR, BT2.1/4.2/5.2/5.3
Bluetooth Frequency Range	2400–2483.5 MHz
MAX Power Transmission (Bluetooth)	CE EIRP: ≤20 dBm@2400–2483.5 MHz;
RFID Modulation Method	ASK
RFID Frequency Range	13.56 MHz
MAX Power Transmission (RFID)	42 dBuA/m @10 m

Function

IR Receiver	1
Card Swiping with NFC	Yes
Wireless Access Point	WIFI 5, 2.4 GHz/5 GHz; Supports enabling Hotsport and WIFi at the same time Wi-Fi 6, 2.4 GHz/5 GHz, supports 802.11 a/b/g/n/ac/ax

Touchscreen

Response Time	< 10 ms
Touch Technology	Infrared
Attachment Method	Zero Air Gap
Touch Points	21 points for Android, and 40 points for Windows
Touch Accuracy	±1 mm (0.04")
Valid Touch	2 mm (0.08")
Touch Height	3 mm (0.12")
Writing Mode	Finger and stylus pen
Communication Mode	USB
Anti-light Interference	Anti-dazzle
Surface Hardness	≥9 H
Touch Resolution	32,767 × 32,767

Speaker

Built-in Speaker	2 × full-frequency speaker
Power	2.0 sound channel, front-end: 2 × 15 W 2.0 sound channel, front-end: 2 × 20 W

General

Power Supply	100–240 VAC, 50/60 Hz
Power Consumption	75-inch: 150 W (typ.); 275 W (max, without OPS and Quicker Changer)
Standby Power Consumption	≤0.5 W
Operating Temperature	0 °C to +40 °C (+32 °F to +104 °F)
Storage Temperature	–10 °C to +50 °C (+14 °F to +122 °F)

Operating Humidity	10%–90% (RH)
Storage Humidity	10%–90% (RH)
Product Material	Metal
Glass	4 mm anti-dazzle tempered glass
Casing Color (Frame/Rear)	Black frame for left and right, silver frame for top and bottom and black frame for back
Product Dimensions	1,707.5 mm × 121.3 mm × 1,050.0 mm (67.23" × 4.48" × 41.34") (L × W × H)
Frame Size	Top frame: 27 mm (1.06"); Left and right frame: 16.5 mm (0.65"); Bottom frame: 68 mm (2.68")
Packaging Dimensions	1,790.0 mm × 200.0 mm × 1,165.0 mm (70.47" × 7.87" × 45.87") (L × W × H)
Net Weight	49.0 kg (108.03 lb)
Gross Weight	60.5 kg (133.38 lb)
Holes Distance	600 mm × 400 mm (23.62" × 15.75")
Installation	Wall mount or mobile bracket
Packing List	1 × Smart interactive whiteboard; 1 × Power cord; 2 × Passive stylus pen; 1 × HDMI cabe; 1 × Quick start guide; 1 × Wall mount bracket (already installed on the whiteboard); 1 × Accessory package; 1 × Remote control; 1 × Legal and Regulatory Information

Certification

Certifications	CE

Ordering Information

Type	Model	Description
Smart interactive whiteboard	DHI-LPH75-ST420	75 inch Smart interactive whiteboard

Installation

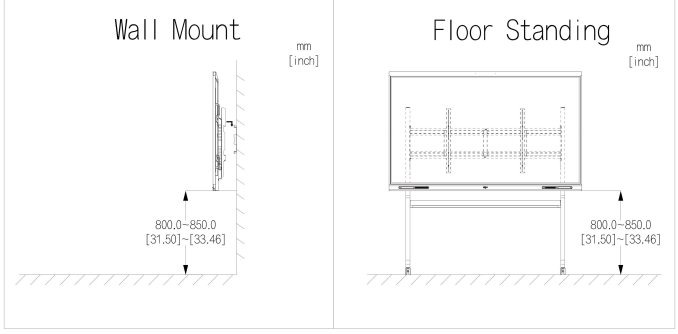

Dimensions (mm[inch])

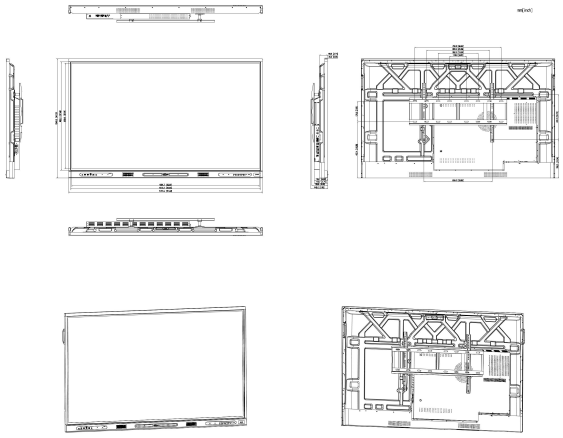

Panels

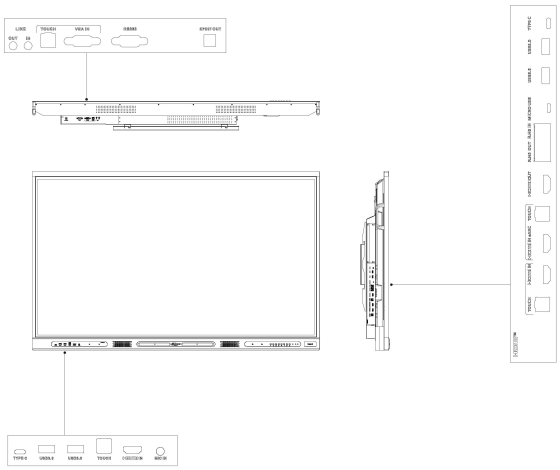

Rev 002.000 © 2024 Dahua. All rights reserved. Design and specificatons are subject to change without notce.
Pictures in the document are for reference only, and the actual product shall prevail.