DH-IPC-HDBW7859Z-Z-PV-X

8MP Smart Dual Light PTRZ Dome WizMind Network Camera



Series Overview

Dahua WizMind 7 Series camera adopts the deep learning algorithm and integrates over 10 intelligent functions, such as video metadata, ANPR, PPE, AcuPick, parking space management, face detection, face recognition and perimeter protection. Intelligent functions can be enabled simultaneously, making it suitable for a variety of scenes. Supports privacy protection for faces, human bodies, and vehicles. Adopts Xinghan Large-Scale AI model technology, the series achieves significant improvements in target detection, recognition, and scene adaptability. The AI ISP technology delivers superior night vision performance for images. The camera is dust-proof, waterproof, and vandal-proof, certified as IP67 and IK10.

Functions

Xinghan Large-Scale AI Models-Vision

Xinghan Large-Scale AI Models-Vision seamlessly expands the storage and operational capacity of algorithmic models through the powerful integration of edge AI model algorithms and NPU computing power. Engineered with a lightweight transformer architecture and enhanced by model distillation and quantization techniques, it optimizes the computing power consumption of ViT operators. This enables the system to collaborate on multiple tasks simultaneously through joint inference between small and large models optimized for edge devices.

AI-ISP

With AI ISP technology, the camera is able to easily adapt to scenes, producing high quality images that reveal the fine details of targets.

Privacy Protection

Dahua Privacy Protection technology can mask the detected face and human body to protect the privacy of some special targets.

- 8-MP 1/1.8" CMOS image sensor, low luminance, and high definition image.
- Outputs max. 8 MP (3840 × 2160)@50/60 fps and 2 MP (1920 × 1080)@100/120 fps.
- Built-in multi-core light, the max. IR distance is 60 m and the max. warm light distance is 50 m.
- With deep learning algorithm, it supports: Video metadata, PPE, face recognition, face detection, perimeter, people counting, parking space management, ANPR, AcuPick, and so on.
- Privacy protection (mosaics/frosted glasses) for faces, human bodies, and vehicle bodies.
- Advanced image processing technologies: Xinghan face exposure, and Xinghan precise focusing.
- The built-in dual Mic utilizes Dahua's noise reduction algorithms for adaptive noise cancellation. Sound pickup reaches 30 m.
- Built-in Hi-Fi large-diameter speaker covers an auditory range of 30 meters when used indoors.
- Supports sound and light alarms, triggering a sound and flashing light when an alarm is triggered.
- Alarm: 3 in, 2 out; audio: 1 in, 1 out; RS-485, BNC; supports max. 1 TB Micro SD card.
- 12 VDC/24 VAC/PoE/ePoE power supply, 12 VDC power output, max. current 165 mA, and peak current 700 mA, easy for installation.
- Encrypted with TPM2.0 (FIPS 140-2 level 2).
- Displays the working status with indicators for simplified installation and commissioning.
- Power detection outputs daily/weekly report.
- G-sensor supports image stabilization and tampering detection.
- Supports dome cover heating.
- Supports motorized PTRZ adjustment for easy installation and configuration.
- IP67 and IK10 protection.

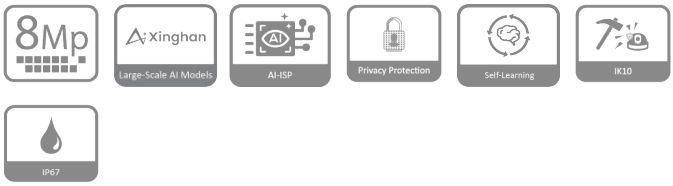

Self-Learning

Empowered by deep learning technology, the device recognizes different types of targets and their statuses through learning and analyzing target features to detect targets and filter out false alarms.

Xinghan Precise Focusing

Powered by large scale scene models, the system generates depth maps and predicts optimal focus settings, automatically applying them to deliver sharp images with a single click.

Smart Conductive Heat Transfer Technology

The curved structure and adaptive heating elements concentrate heat along the light shield to warm the dome cover and prevent fogging.

Technical Specification

Camera

Image Sensor	1/1.8" CMOS
Max. Resolution	3840 (H) × 2160 (V)
Scanning System	Progressive
Electronic Shutter Speed	Auto/Manual 1/3 s–1/100,000 s
Min. Illumination	0.0005 lux@F1.0 (Color, 30 IRE) 0.0001 lux@F1.0 (B/W, 30 IRE) 0 lux (Illuminator on)
S/N Ratio	>56 dB
Illumination Distance	Up to 60 m (196.85 ft) (IR) Up to 50 m (164.04 ft) (Warm light)
Illuminator On/Off Control	Auto;Manual
Illuminator Number	4 (Multi-core (IR + warm) light)
Angle Adjustment	Pan: 0° to 355° Tilt: 0° to 80° Rotation: 0° to 355°

Lens

Lens Type	Motorized vari-focal				
Lens Mount	Φ16				
Focal Length	2.7 mm–12 mm				
Max. Aperture	F1.0				
Field of View	H: 112°–48°; V: 58°–27°; D: 137°–56°				
Iris Control	Auto				
Iris Control Type	P-Iris				
Close Focus Distance	0.2 m (0.66 ft)				
DORI Distance	Lens	Detect	Observe	Recognize	Identify
	W	96.4 m (316.27 ft)	38.6 m (126.64 ft)	19.3 m (63.32 ft)	9.6 m (31.50 ft)
	T	186.6 m (612.20 ft)	74.6 m (244.75 ft)	37.3 m (122.38 ft)	18.7 m (61.35 ft)
	*DORI (Detect, Observe, Recognize, Identify) is a standard system (EN-62676-4) for defining the ability of a person viewing the video to distinguish persons or objects within a covered area. The numbers in this table do not reflect intelligent function distances. For intelligent function distances, refer to installation and commissioning manual/project design tool.				

Smart Event

IVS	Abandoned object; missing object

Intelligence

Intelligence Notes	Dual intelligent functions can be enabled simultaneously: Face detection + people counting; face recognition + people counting; PPE detection + Perimeter Protection; PPE detection + face detection; PPE detection + face recognition
IVS (Perimeter Protection)	Intrusion, tripwire, fast moving (the three functions support the classification and accurate detection of vehicle, animal and human), loitering detection, people gathering, parking detection, stay detection, abandoned object, and missing object. Offers Perimeter Protection Large-Scale AI Models to extend the target detection range and reduce the rate of false alarm. Supports self-learning, it filters out false alarms. Supports privacy protection.
AcuPick	Uses deep learning algorithms and works with back-end devices to accurately match targets, such as people, animals, and motor vehicles, and search through live and recorded videos to quickly locate targets.
Face Detection	Face detection; track; snapshot; snapshot optimization; optimal face snapshot upload; face enhancement; face exposure; face attributes extraction including 6 attributes and 8 expressions; face snapshot set as face, one-inch photo or custom; snapshot strategies (real-time snapshot, quality priority and optimization snapshot); face angle filter; optimization time setting; supports privacy protection for faces
Face Recognition	There are two modes: General mode and counting mode. General mode: Face detection; snapshot; snapshot optimization; optimal face snapshot upload; face enhancement; face exposure; face attributes extraction including 6 attributes and 8 expressions; face snapshot set as face or one inch photo; snapshot strategies (recogniton priority and optmization snapshot); face angle filter; optmization time setting. support privacy protection for faces. Supports adding 5 group face databases; registering person one by one or in batches; setting face similarity; and supports face comparison with the face database containing up to 200,000 face pictures. Counting mode: Offers advanced customer counter, filters out specified faces from the face database, and exports reports both before and after removing duplicate faces.
PPE Detection	Triggers alarms when the detected object matches or does not match all of the configured attributes (helmets, hats, uniforms, masks, gloves, shoe covers, shoes, safety vests, seatbelts, goggles, and aprons). Supports self-learning, it detects the different colors and styles of workwear. Supports privacy protection for faces/human bodies.
People Counting	Tripwire people counting and people counting in area; generating and exporting report (day/month/year); queue management and exporting report (day/month); 4 rules can be set for tripwire people counting, people counting in area, and queue management; supports privacy protection
Heat Map	Yes

ANPR	ANPR, track, priority, snapshot. Vehicle attributes: License plate, vehicle type, vehicle color, vehicle brand. Other attributes: Seat belt, smoking, calling. Support up to 10,000 blocklist records and 10,000 allowlist records. The camera can recognize plate numbers of vehicles moving at speeds of up to 60 km/h. Supports privacy protection for vehicle bodies.
Parking Space Management	Parking Space Management: Manage outdoor and planned parking lots; manage parking spaces in multiple areas; display the total number of parking spaces and parking spaces that are available; trigger alarms based on a predefined number of vehicles
Video Metadata	Motor vehicle, non-motor vehicle, face, human detection; track; snapshot; snapshot optimization; optimal face snapshot upload Generates flow statistics for people, motor vehicles, and non-motor vehicles based on the direction, and exports reports Motor vehicle attributes: License plate, vehicle type, vehicle color, vehicle logo, seatbelt, smoking, and calling Non-motor vehicle attributes: Type, color, number of people, top type and color, and hat Human body attributes: Top and bottom type and color, bag, hat, gender, and umbrella Supports privacy protection for faces, human bodies, and vehicle bodies
Privacy Protection	Mosaics and frosted glasses can be automatically placed over faces, human bodies and vehicle bodies protect their privacy; adjustable mosaic grain size
Smart Search	Yes

Video

Video Compression	H.265; H.264; H.264H; H.264B; MJPEG (Only supported by sub stream)
AI Coding	AI H.265; AI H.264 *Includes smart codec technology, Smart H.265+ and Smart H.264+
Video Frame Rate	Default: Main stream: 3840 × 2160@(1–25/30 fps) Sub stream: 1920 × 1080@(1–25/30 fps) Third stream: 1920 × 1080@(1–25/30 fps) Fourth stream: 1920 × 1080@(1–25/30 fps) Fifth stream: 704 × 576@(1–25 fps)/704 × 480@(1–30 fps) High Frame Rate: Main stream: 3840 × 2160@(1–50/60 fps)/1920 × 1080@(1–100/120 fps) Sub stream: 1920 × 1080@(1–25/30 fps) *The values above are the max. frame rates of each stream; for multiple streams, the values will be subjected to the total encoding capacity.
Streaming Capability	5 streams
Resolution	8M (3840 × 2160); 6M (3072 × 2048); 5M (3072 × 1728/2592 × 1944); 4M (2688 × 1520); 3M (2048 × 1536)/2304 × 1296); 1080p (1920 × 1080); 1.3M (1280 × 960); 720p (1280 × 720); D1 (704 × 576/704 × 480); CIF (352 × 288/352 × 240)
Bit Rate Control	VBR;CBR;ABR
Video Bit Rate	H.264: 32 kbps–10,240 kbps; H.265: 12 kbps–10,240 kbps
Day/Night	Auto(ICR)/Color/B/W
BLC	Yes
HLC	Yes
WDR	140 dB
Scene Self-adaptation (SSA)	Yes
White Balance	Auto; natural; street lamp; outdoor; manual; regional custom
Gain Control	Auto
Noise Reduction	3D NR
Motion Detection	OFF/ON (4 areas, rectangular)
Region of Interest (RoI)	Yes (4 areas)
Image Stabilization	Gyroscope Image Stabilization (GIS)
Smart Illumination	Yes
Smart Dual Light	Yes
Defog	Yes
Image Rotation	0°/90°/180°/270° (Support 90°/270° with 2688 × 1520 resolution and lower)
Mirror	Yes
Privacy Masking	4 mosaics + 8 color blocks (The color of every pure color block can be set as one, including red, orange, yellow, green, cyan, blue, purple and black.)
LDC	Yes

Audio

Built-in MIC	Yes, built-in dual Mic
Built-in Speaker	Yes, built-in speaker;Max power consumption: 2 W; max sound level at 10 cm: 110 dB * Test results from laboratory
Audio Compression	G.711a; G.711Mu; PCM; G.726; G.723

Alarm

Alarm Event	No SD card; SD card full; SD card error; SD card durability warning; network disconnection; IP conflict; illegal access; motion detection; video tampering; tripwire; intrusion; fast moving; abandoned object; missing object; loitering detection; people gathering; parking detection; scene changing; audio detection; defocus detection; external alarm; face detection; face recognition; video metadata; ANPR; people counting in area; stay alarm; people counting; people number error detection; people stay detection; security error; parking space management; PPE detection; tampering detection

Network

Network Port	RJ-45 (10/100/1000 Base-T)
SDK and API	Yes
Network Protocol	IPv4; IPv6; HTTP; TCP; UDP; ARP; RTP ; RTSP; RTCP; RTMP; SMTP; FTP; SFTP; DHCP; DNS; DDNS; QoS; UPnP; NTP; Multicast; ICMP; IGMP; NFS; SAMBA; PPPoE; SNMP; DoLynk Cloud; Auto Registration
Interoperability	ONVIF (Profile S & Profile G & Profile T & Profile M); CGI
User/Host	20 (Total bandwidth: 340 M)
Storage	FTP; SFTP; Micro SD card (support max. 1 TB); NAS

Browser	IE: IE11 and later; Chrome: Chrome 100 and later; Firefox: Firefox 47.0.2 and later
Management Software	SmartPSS Lite; DSS; DMSS
Mobile Client	iOS;Android
Security	Digest;WSSE;Account lockout;Security logs;IP/MAC filtering;Generation and importing of X.509 certification;syslog;HTTPS;802.1x;Trusted boot;Trusted execution;Trusted upgrade;Session security;Security warning;AES 256;TPM 2.0 (FIPS 140-2 level 2);SSL/TLS1.3

Function

Light Warning	Yes
Sound Warning	Yes
Heater (Window Heating)	Quickly removes water,ice,snow,and mist from the glass to keep images clear

Certification

Certifications	CE-LVD: EN62368-1; CE-EMC: Electromagnetic Compatibility Directive 2014/30/EU

Port

RS-485	1 (baud rate range: 1200 bps–115200 bps)
Audio Input	1 channel (RCA port)
Audio Output	1 channel (RCA port)
Alarm Input	3 channels in: supports wet contact connection (max load 5 mA 3–5 VDC); supports dry contact connection
Alarm Output	2 channels out: dry contact, max load 1,000 mA 30 VDC/500 mA 50 VAC
Analog Output	1 channel (CVBS output: BNC)
Power Output	12 VDC power output, max. current 165 mA, peak current 700 mA

Power

Power Supply	12 VDC (±30%) & 24 VAC (±30%) independent power port; PoE+ (802.3at)
Dual Power Backup	When the power adapter and PoE provide power at the same time, disconnect one of them. The device will continue to work, but will not restart.
Power Consumption	Basic: 7.5 W (12 VDC); 8.87 W (24 VAC); 9.48 W (PoE); Max.: 19 W (12 VDC); 22.5 W (24 VAC); 23.8 W (PoE) (ICR switch + IR intensity); Heating: 2 W (12 VDC); 2.4 W (24 VAC); 2.6 W (PoE)
ePoE	Yes

Environment

Operating Temperature	–40 °C to +65 °C (–40 °F to +149 °F)
Operating Humidity	≤ 95% (RH), non-condensing
Storage Temperature	–40 °C to +65 °C (–40 °F to +149 °F)
Storage Humidity	10–95% (RH), non-condensing
Protection	IP67; IK10
Anti-corrosion Level	Basic Protection
Anti-corrosion Level	*The products are designed for general use and are applicable even in areas with no specific requirements for anti-corrosion protection.

Structure

Casing Material	Casing: Metal
Product Dimensions	150 mm × Φ159 mm (5.91" × Φ6.26")
Net Weight	1.4 kg (3.09 lb)
Gross Weight	1.9 kg (4.19 lb)

Ordering Information

Type	Model	Description
IP CAMERA	DH-IPC-HDBW7859Z-Z-PV-X	8MP Smart Dual Light PTRZ Dome WizMind Network Camera
Accessories (Optional)	DH-PFA101	Mount Adapter
	DH-PFB300C	Ceiling Mount Bracket
	DH-PFB302S	Wall Mount Bracket
	DH-PFA151	Corner Mount Bracket
	DH-PFA150	Pole Mount Bracket
	DH-PFB211W	Wall Mount Bracket
	DH-PFA156	Pole Mount Bracket
	DH-PFM320D-EN	DC12V2A power adapter
	PFM900-E	Integrated Mount Tester
	DHI-TF-P100/1TB	MicroSD Card

Accessories

Optional:



DH-PFA101
Mount Adapter



DH-PFB300C
Ceiling Mount Bracket



DH-PFB302S
Wall Mount Bracket



DH-PFA151
Corner Mount Bracket



DH-PFA150
Pole Mount Bracket



DH-PFB211W
Wall Mount Bracket



DH-PFA156
Pole Mount Bracket



DH-PFM320D-EN
DC12V2A power adapter



PFM900-E
Integrated Mount Tester

Optional:



DHI-TF-P100/1TB
MicroSD Card

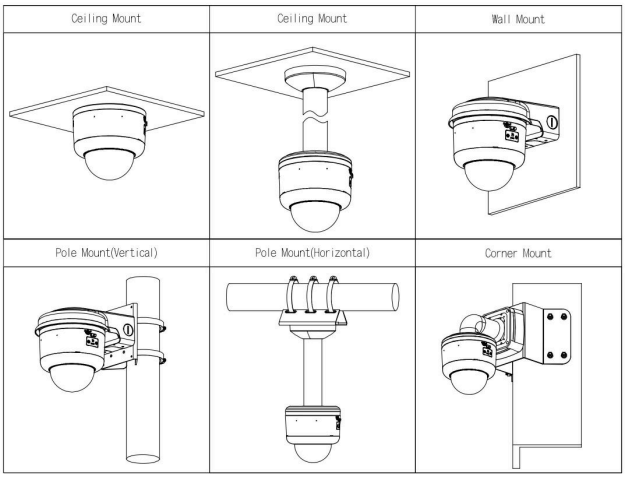

Dimensions (mm[inch])

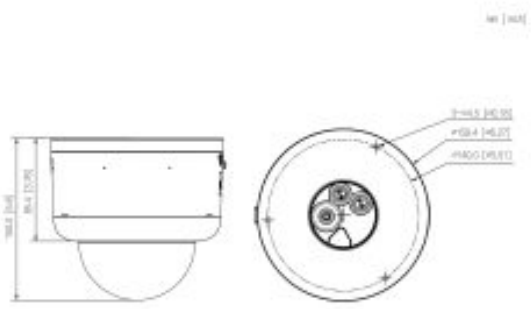

Rev 002.000 ©Dahua. All rights reserved. Design and specifications are subject to change without notice.
Pictures in the document are for reference only, and the actual product shall prevail.