Network Speed Dome & PTZ Camera

Installation Manual



V1.0.0

Foreword

General

This manual introduces the precautions, installation preparations and cables of the Speed Dome & PTZ Camera (hereinafter referred to as "the Device").

Some specifications and metrics might not apply to all models, and the actual product shall prevail.

Safety Instructions

The following categorized signal words with defined meaning might appear in the manual.

Signal Words	Meaning
DANGER	Indicates a high potential hazard which, if not avoided, will result in death or serious injury.
WARNING	Indicates a medium or low potential hazard which, if not avoided, could result in slight or moderate injury.
CAUTION	Indicates a potential risk which, if not avoided, could result in property damage, data loss, lower performance, or unpredictable result.
TIPS	Provides methods to help you solve a problem or save you time.
NOTE	Provides additional information as the emphasis and supplement to the text.

Revision History

Version	Revision Content	Release Time
V1.0.0	First release.	July 2020

About the Manual

- The manual is for reference only. If there is inconsistency between the manual and the actual product, the actual product shall prevail.
- We are not liable for any loss caused by the operations that do not comply with the manual.
- The manual would be updated according to the latest laws and regulations of related regions. For detailed information, see the paper manual, CD-ROM, QR code or our official website. If there is inconsistency between paper manual and the electronic version, the electronic version shall prevail.
- All the designs and software are subject to change without prior written notice. The product updates might cause some differences between the actual product and the manual. Please contact the customer service for the latest program and supplementary documentation.
- There still might be deviation in technical data, functions and operations description, or errors in print. If there is any doubt or dispute, please refer to our final explanation.
- Upgrade the reader software or try other mainstream reader software if the manual (in PDF format) cannot be opened.
- All trademarks, registered trademarks and the company names in the manual are the properties

of their respective owners.

- Please visit our website, contact the supplier or customer service if there is any problem occurred when using the Camera.
- If there is any uncertainty or controversy, please refer to our final explanation.

Important Safeguards and Warnings

The manual will help you to use the Device properly. Read the manual carefully before using the Device, and keep it well for future reference.

Operating Requirements

- Do not press hard, violently vibrate, and soak the Device when transporting and storing it. Complete package is necessary during the transportation. We will assume no responsibility for any damage or problem caused by incomplete package during the transportation.
- Protect the Device from falling down or heavy vibration.
- Buckle the safety hook before installing the Device if it is included.
- Keep the Device away from devices that generate electromagnetic field like televisions, radio transmitters, electromagnetic devices, electric machines, transformers, and speakers; otherwise image quality will be influenced.
- Keep the Device away from smoke, vapor, heat, and dust.
- Do not install the Device near heating furnace, spotlight, and other heat sources. If it is installed on ceiling, in kitchen or near boiler room, the Device temperature might rise.
- Do not dissemble the Device; otherwise it might cause dangers or device damage. Contact your local retailer or customer service center for internal setup or maintenance requirement.
- Make sure that there is no metal, or inflammable, explosive substance in the Device; otherwise it might cause fire, short-circuit, or other damage.
- Avoid sea water or rain eroding the Device.
- Avoid the lens aiming at intense light source, including sunlight and incandescent light; otherwise the lens might be damaged.
- It is recommended to use the Device with a lightning-proof device for better lightning-proof effect.
- Before installing the Device, you need to confirm the salt spray tolerance level. Do not install the Device in an environment with higher salt spray level than the Device can tolerate. There are three salt spray tolerance levels of cameras.
  - ◇ Devices with higher salt spray tolerance level can be installed in an area within 1500 m by the sea, or offshore platform.
  - ◇ Devices with medium salt spray tolerance level can be installed in an area 1500 m away from the sea.
  - ◇ Devices not salt spray tolerant can only be installed in an area 3000 m away from the sea.
- After unpacking, if the packing bag is damaged or leaking air, and the desiccant particles are of different colors, the normal use of the Device will not be affected.
- For the Device that supports laser, do not aim the laser directly at eyes. And keep a proper distance from the flammable to avoid fire.
- Contact your local retailer or customer service center if the Device is abnormal. Do not disassemble or repair the product by yourself. We will assume no responsibility for any problems caused by unauthorized modifications, disassembly or repair, incorrect installation or use, and overuse of certain components.

Power Requirements

- All installation and operations shall conform to local electrical safety regulations.
- Turn off the power and disconnect the power cord immediately if there is water or liquid falling into the Device. And contact your local retailer or customer service center.
- The power source shall conform to the requirement of the Safety Extra Low Voltage (SELV) standard, and supply power with rated voltage which conforms to Limited Power Source requirement according to IEC60950-1. Note that the power supply requirement is subject to the device label.
- Use the power adapter provided by legitimate manufacturers.
- Do not connect several cameras to one power adapter. It may result in overheat or fire if it exceeds the rated load.
- Make sure that the power is off when you connect the cables, and install or uninstall the Device.
- Turn off the power and disconnect the power cord immediately if there is any smoke, disgusting smell, or noise from the Device. And contact your local retailer or customer service center.

Cleaning Requirements

- Clean the enclosure with soft cloth. To remove the dirt, you can dip the soft cloth in proper detergent, wring the soft cloth out, and then dry the enclosure with soft cloth.
- Do not use gasoline, paint thinner or other chemicals to clean the enclosure; otherwise it might result in enclosure transfiguration or paint flake.
- Read all the manuals included before using chemical cloth. Avoid long time touch between the plastic or rubber material and the enclosure. It might result in device damage and paint flake.

Requirements for Installation and maintenance personnel

- Have certificates or experiences related to installation and maintenance of the closed-circuit television (CCTV).
- Have certificates related to working at height.
- Have basic knowledge and operation technique for low-voltage wiring and low-voltage electronic circuit connection.
- Have the ability to read and understand the manual.

Requirements for Lifting the Device

- Select appropriate tools to lift the Device.
- Make sure that the selected tools reach the installation height.
- Make sure that the selected tools have high safety performance.

Table of Contents

Foreword I

Important Safeguards and Warnings III

1 Installation Preparation 1

1.1 Basic Requirements 1

1.2 Installation Check 1

1.3 Cable Preparation 1

1.3.1 Video Cable Requirements 1

1.3.2 RS-485 Cable Requirements 2

1.3.3 Selecting Power Cable 2

1.3.3.1 Power Cable 2

1.3.3.2 PoE Power Cable 3

2 Cables 4

2.1 Cable Description 4

2.2 Cable Connection 6

2.2.1 Alarm Cable Connection 6

2.2.2 Thunder-Proof Cable Connection 6

2.2.2.1 Outdoor 6

2.2.2.2 Indoor 8

3 RS-485 Cable 10

3.1 Basic Features 10

3.2 Common Issues in Use 10

3.3 FAQ on RS-485 Cable 11

4 Wi-Fi Performance 12

5 Cable Diameter (24V AC) and Transmission Distance 13

6 Cable Diameter (12V DC) and Transmission Distance 14

7 Cable Diameter (24V DC) and Transmission Distance 15

8 Cable Diameter (30V DC) and Transmission Distance 16

9 Cable Diameter (36V DC) and Transmission Distance 18

10 Wire Gauge Reference Sheet 20

Appendix 1 Cybersecurity Recommendations 21

1 Installation Preparation

1.1 Basic Requirements

- All installation and operations shall conform to your local electrical safety regulations, fire protection regulations, and other relevant regulations.
- Make sure that the application scenario conforms to installation requirements. Contact your local retailer or customer service center if there is any problem.
- Use the Device according to the operating environment.
- Keep the original packing material well because you might need it to pack the Device and send it back for repair.

1.2 Installation Check

- Make sure that the place where the Device is installed has enough space to hold the Device and its mounting accessories.
- For PTZ cameras, make sure that the place where the Device is installed can sustain at least 4 times the weight of the Device and its mounting accessories; for speed domes, make sure that the ceiling and wall can sustain 8 times the weight of the Device and its mounting accessories.
- Do not install the Device at risky or unstable places.
- Make sure that the wall is thick enough to install expansion bolts (Users need to buy expansion bolts separately).
- For speed domes support intelligent tracking, illegal parking capture or laser, make sure that the mounting height is over 6 m.

1.3 Cable Preparation

Select the video cable depending on transmission distance.

1.3.1 Video Cable Requirements

- 75 ohm.
- Pure copper cored cables.
- 95% braided copper shielding.
- For cables applicable to network devices and their maximum transmission distance, see Table 1-1.
- For cables applicable to HDCVI devices and their maximum transmission distance, see Table 1-2.

Table 1-1 Cables and maximum transmission distance (network)

Model	Maximum Transmission Distance (ft/m)
RG59/U	750 ft/229 m
RG6/U	1,000 ft/305 m
RG11/U	1,500 ft/457 m

Table 1-2 Cables and maximum transmission distance (HDCVI)

Model	Maximum Transmission Distance (ft/m)
SYV-75-3	720P (25 fps/30 fps): 1,640 ft/500 m
	720P (50 fps/60 fps): 984 ft/300 m
	1080P (25 fps/30 fps): 984 ft/300 m

1.3.2 RS-485 Cable Requirements

When using 0.56 mm (24AWG) twisted-pair line, depending on different baud rates, the theoretical maximum transmission distance is different.

Table 1-3 Theoretical maximum transmission distance

Baud Rate	Maximum Transmission Distance
2400bps	1800 m
4800bps	1200 m
9600bps	800 m

The maximum transmission distance will be reduced in the following conditions: When thinner communication cables are used; the Device is used in places with intense electromagnetic interference; too many devices are connected to the RS-485 cable. Otherwise, maximum transmission distance will be increased.

1.3.3 Selecting Power Cable

1.3.3.1 Power Cable

Depending on the power cable specification, the same cable diameter corresponds to different transmission distance.

- For 24V AC power supply, see "5 Cable Diameter (24V AC) and Transmission Distance".
- For 12V DC power supply, see "6 Cable Diameter (12V DC) and Transmission Distance".
- For 24V DC power supply, see "7 Cable Diameter (24V DC) and Transmission Distance".
- For 30V DC power supply, see "8 Cable Diameter (30V DC) and Transmission Distance".
- For 36V DC power supply, see "9 Cable Diameter (36V DC) and Transmission Distance".

1.3.3.2 PoE Power Cable

Table 1-4 PoE power cable

POE Specification	Network Cable Specification
AF	CAT5E and network cables with higher standard.
AT	
HiPoE or BT	

2 Cables

2.1 Cable Description

The Device is equipped with a multi-functional combination cable by default, including power cord, video cable, audio cable, RS-485 control cable, alarm cable, network cable, and optical fiber cable. For details, see Figure 2-1.

The cables of different models vary, and the actual product shall prevail. The manual will introduce the cables as complete as possible.

Figure 2-1 Cables

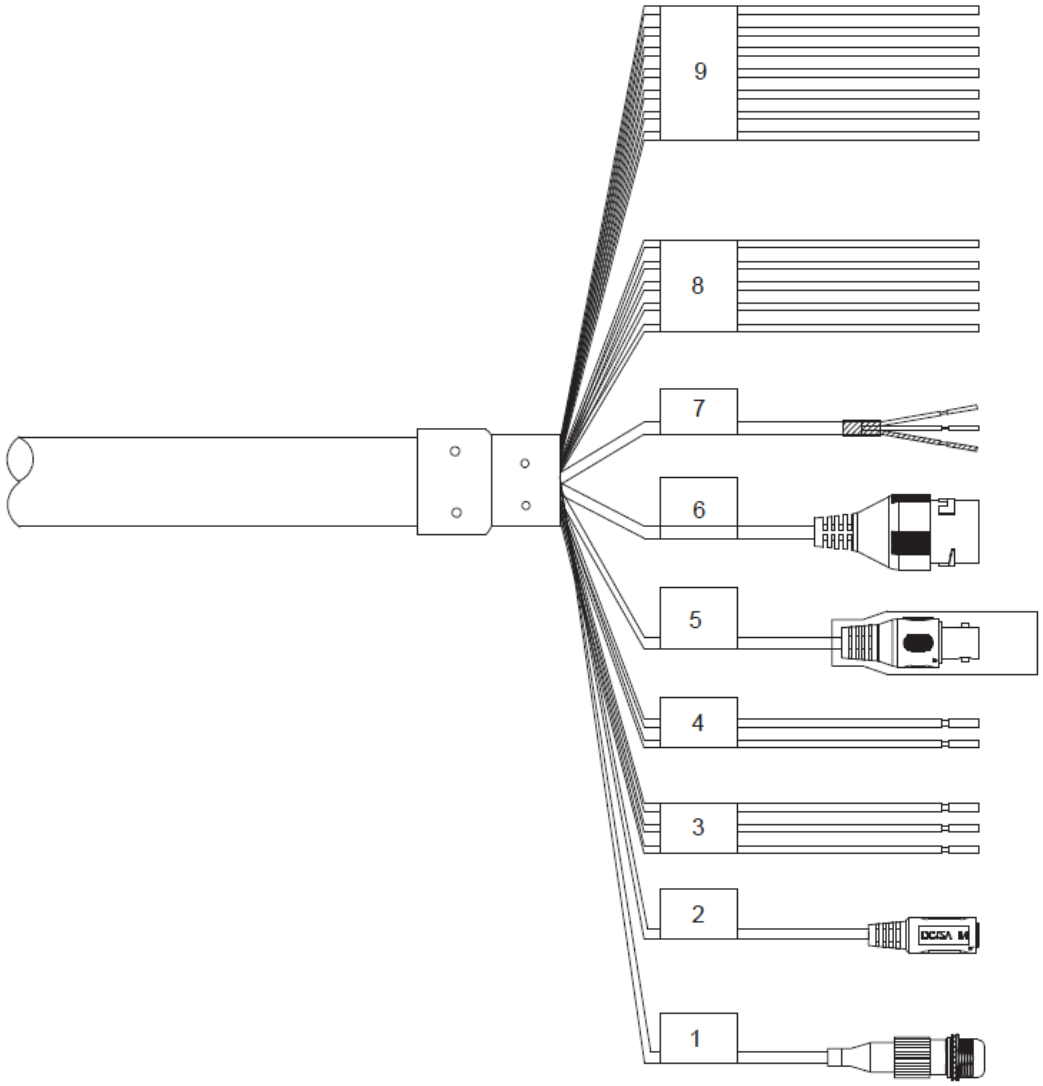

Table 2-1 Cable description

No.	Description
1	FC connector
2	DC power input port
3	24V AC power input ● Red: V+ ● Black: V– ● Yellow-green: Grounding cable
4	RS-485 ● Yellow: A+ ● Orange: B–

No.	Description
5	Video output port
6	Ethernet port
7	• White: Audio input • Red: Audio output • Black: Audio grounding cable
8	• Blue: Alarm output 1 • Black: Alarm output 2 • Green: Contact switch 1 • Pink: Contact switch 2 • Yellow-green: Grounding cable
9	• Red: Alarm input 1 • Brown: Alarm input 2 • Grey: Alarm input 3 • Light green: Alarm input 4 • Purple: Alarm input 5 • White: Alarm input 6 • Yellow-black: Alarm input 7

2.2 Cable Connection

2.2.1 Alarm Cable Connection

Step 1 Connect the alarm input device to ALARM_IN and ALARM_GND of the user cable.

Step 2 Connect alarm output device to ALARM_OUT and ALARM_COM of the user cable, and alarm output is relay switch output.

Step 3 Go to the web interface of the Device, and complete settings for alarm input and output devices. The alarm input on Web interface corresponds to the alarm input of the cables. Set the corresponding NO and NC output according to the high/low level signal generated by alarm input device when alarm is triggered.

Step 4 Set the alarm output of cables on the web interface.

2.2.2 Thunder-Proof Cable Connection

The following installation figures are for reference only, and the actual product shall prevail. This chapter takes PTZ camera as an example.

2.2.2.1 Outdoor

Transient voltage suppressor (TVS) is applied to protect the Device against voltage spikes and overvoltage below 6000V. However, it is still necessary to do operations to protect the Device

according to actual conditions.

- The signal transmission cable must stay at least 50 m away from high voltage devices and high voltage wires.
- When laying cables outdoors, try to lay them under the eaves.
- At open places, lay cables underground by means of hermetic steel tube, and then do equipotential grounding to both ends of steel tubes. Laying overhead power cables are prohibited.
- At places with severe thunderstorms and induced voltage (like substation), you need to prepare high-powered lightning protection devices and lightning conductors.
- When laying cables and connecting lightning protection devices, you must comply with regional laws and regulations.
- You must do equipotential grounding to the electric system. The grounding device must meet the requirements of anti-jamming and conform to your local electrical safety code. The grounding device shall not form short circuit to N (neutral) line of high voltage power grid or be mixed with other wires. When the electrical system is connected to the ground cable, the impedance cannot exceed 4Ω and the cross-sectional area of the earth lead cannot exceed 25 mm^2.

Figure 2-2 Installing lightning protection devices outdoors

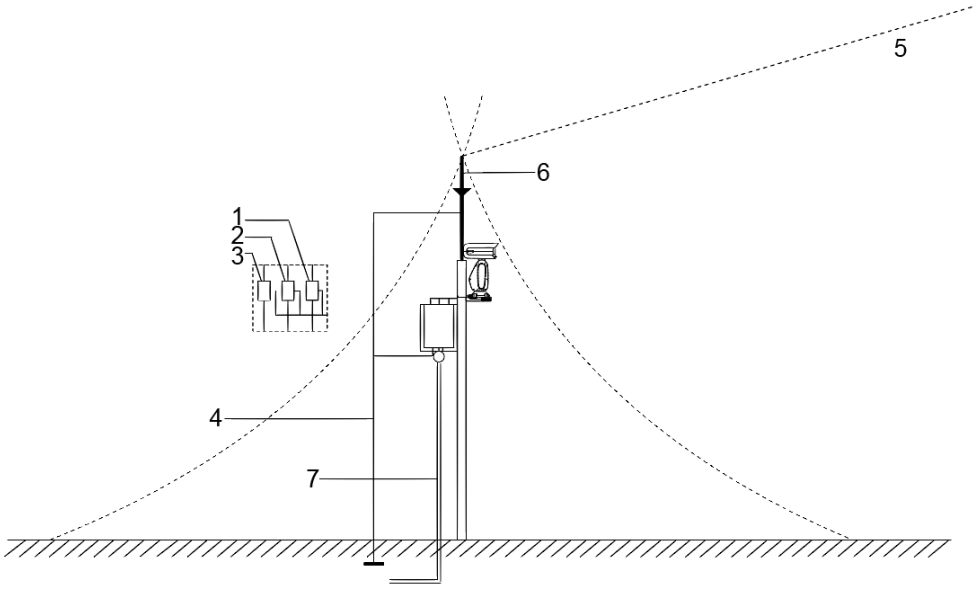

Table 2-2 Installing lightning protection devices outdoors

No.	Description
1	Video lightning conductor.
2	Communication lightning conductor.
3	Power supply lighting conductor.
4	Impedance of the cable connected to the grounding wire should be less than 4Ω.
5	The radius is 60 m.
6	Lightning conductor.
7	Steel tube.

Figure 2-3 Installing lightning protection devices outdoors (2)

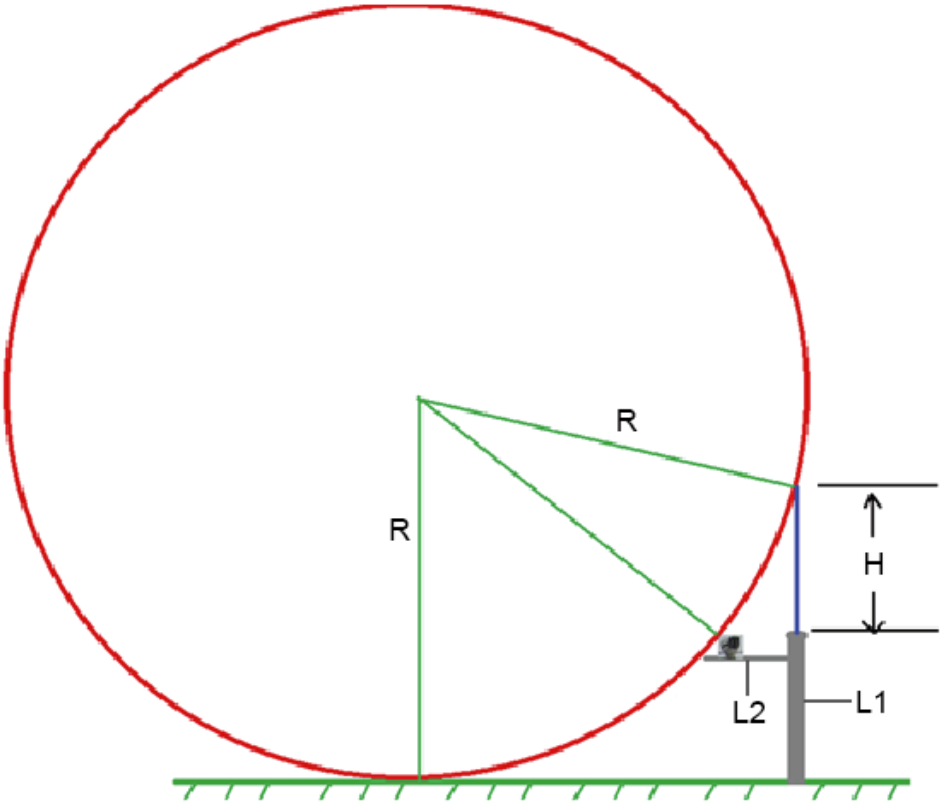

- R: The radius of the circle, and R=60 m.
- L1: The length of the pole that holds the lightning conductor.
- L2: The length of the rail that holds the Device.
- H: The length of the lightning conductor.

To get the value of L1, you need to use the formula:

$$\left(\sqrt{R^2-[R-(L1+H)]^2}-L2\right)^2+(R-L1)^2=R^2$$

2.2.2.2 Indoor

You shall use multiple copper cables whose cross-sectional area is not less than 25 mm^2 to connect the yellow-green grounding cable/grounding screws to the indoor equipotential grounding terminals.

Figure 2-4 Installing lightning protection devices indoors

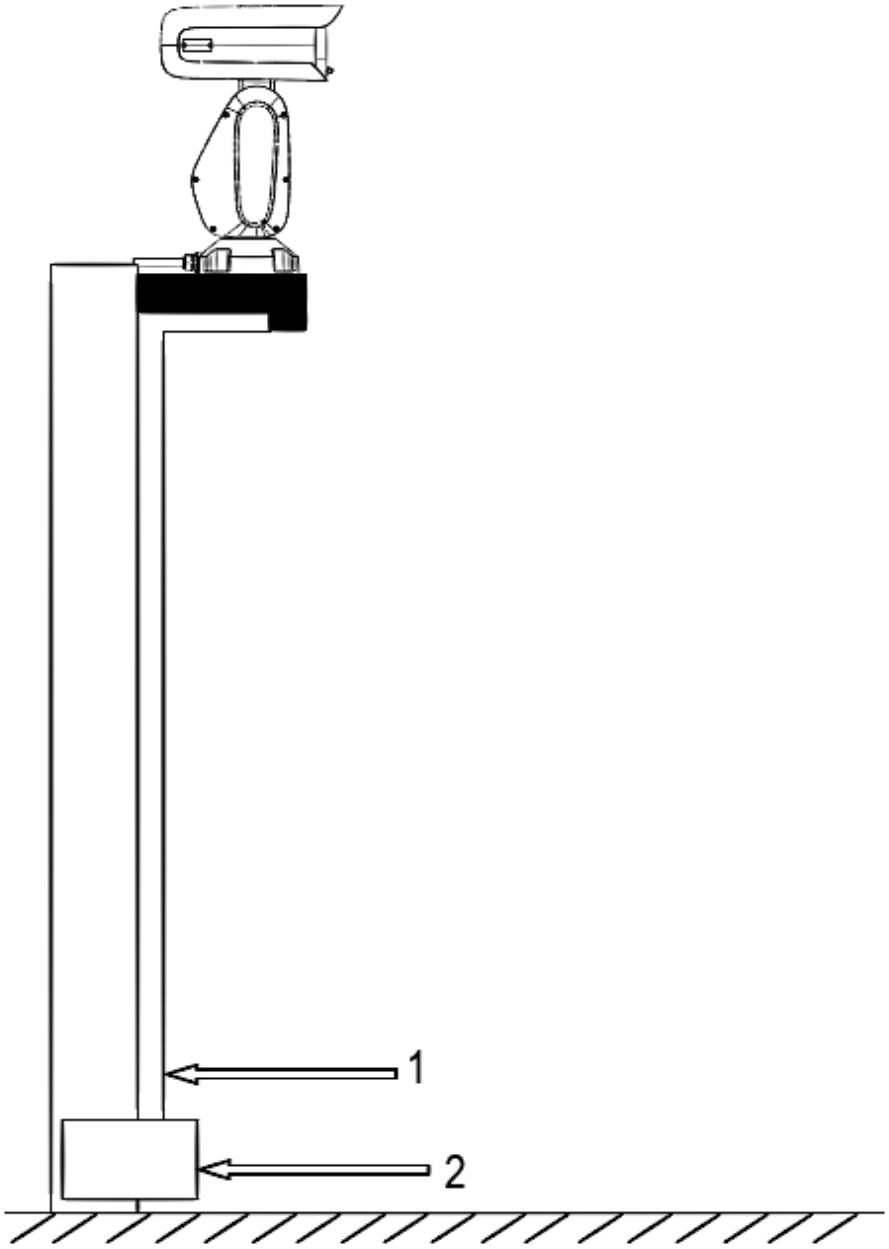

Table 2-3 Installing lightning protection devices indoors

No.	Name
1	Yellow-green grounding cable
2	Indoor equipotential grounding terminal

3 RS-485 Cable

3.1 Basic Features

RS-485 industrial buses are half-duplex communication buses whose characteristic impedance is 120Ω. Its maximum load is 32 payloads (including controller devices and controlled devices).

3.2 Common Issues in Use

Users tend to connect devices as the way displayed in Figure 3-1. In this case, the terminal resistance must be connected to the two devices whose cable length is the longest among all the devices (in Figure 3-1, cable length between 1# and 15# is the longest). However, this connection manner does not comply with the RS-485 industrial standard. As a result, common issues like signal reflection and anti-interference capability reduction will occur. And the Device is out of control or cannot stop.

Figure 3-1 Common method to connect devices

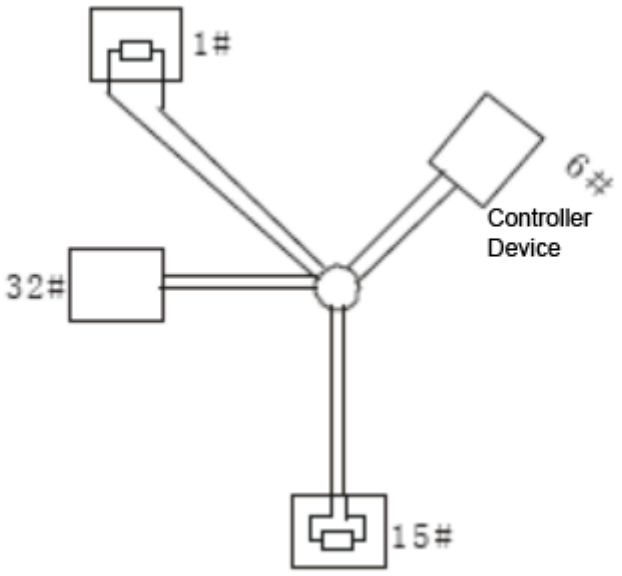

To fix the issues, it is recommended to use RS-485 distributors. The RS-485 distributor can help avoid the common connection issues so as to improve transmission quality.

Figure 3-2 Connecting method with RS-485 distributors

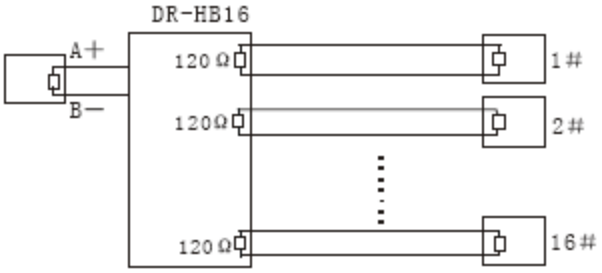

3.3 FAQ on RS-485 Cable

Malfunction	Possible Reason	Solution
The Device can perform self-check, but is out of control.	Baud rate/address of the host and Device are not matched.	Modify the baud rate/address of the host or Device to be matched.
	Positive electrode and negative electrode of RS-485 cable are misconnected.	Connect cables to the positive electrode and negative electrode correctly.
	Loose connection.	Connect the cables firmly.
	RS-485 cable is broken.	Replace RS-485 cable.
The Device can be controlled, but the operation is not smooth.	RS-485 cable is in poor contact.	Connect the RS-485 cable firmly.
	RS-485 cable is broken.	Replace RS-485 cable.
	The distance between the host and the Device is too long.	Install terminal resistance.
	Too many cameras are connected parallelly.	Install RS-485 distributors.

4 Wi-Fi Performance

Table 4-1 Wi-Fi performance description

Performance	Description	
Frequency band supported	2.4G; 5G	
Working channel (consistent with AP)	2.4G	CH1–CH13 (the actual working channel shall prevail).
	5G	The actual working channel shall prevail.
Transmission performance	• At open places without interference, if the Device is installed at least 1.5 m above the ground, the effective communication distance is 100 m. • In the environment without interference, the signal can pass through a load-bearing wall, and the effective communication distance is 20 m.  The actual wall penetration capacity is greatly affected by network layout and actual environment.	

5 Cable Diameter (24V AC) and Transmission Distance

The recommended transmission distances are for reference only, and the actual conditions shall prevail. The following table shows the maximum transmission distance of cables with certain diameter when the 24V AC power source voltage loss rate is below 10%.
For devices powered by alternating current, the maximum voltage loss rate allowed is 10%. For example, when a device of 20W rated power is installed 122 feet (37 m) away from the transformer, the minimum diameter needed is 0.80 mm.



In the following table, the unit for diameter is mm, and the unit for transmission distance is foot (m).

Table 5-1 Cable diameter (24V AC) and transmission distance

Transmission Power (W)	Transmission Distance (Diameter: 0.80)	Transmission Distance (Diameter: 1.00)	Transmission Distance (Diameter: 1.25)	Transmission Distance (Diameter: 2.00)
5	489 (149)	763 (233)	1193 (364)	3053 (931)
10	244 (74)	382 (116)	596 (182)	1527 (465)
15	163 (50)	254 (77)	398 (121)	1018 (310)
20	122 (37)	191 (58)	298 (91)	763 (233)
25	98 (30)	152 (47)	239 (73)	611 (186)
30	81 (25)	127 (39)	199 (61)	509 (155)
35	70 (21)	109 (33)	170 (52)	436 (133)
40	61 (19)	95 (29)	149 (45)	382 (116)
45	54 (16)	85 (26)	133 (41)	339 (103)
50	49 (15)	76 (23)	119 (36)	305 (93)
55	44 (13)	69 (21)	108 (33)	278 (85)
60	41 (12)	64 (20)	99 (30)	254 (77)
65	38 (12)	59 (18)	92 (28)	235 (72)
70	35 (11)	55 (17)	85 (26)	218 (66)
75	32 (10)	51 (16)	80 (24)	204 (62)
80	31 (9)	48 (15)	75 (23)	191 (58)
85	29 (9)	45 (14)	70 (21)	180 (55)
90	27 (8)	42 (13)	66 (20)	170 (52)
95	26 (8)	40 (12)	63 (19)	161 (49)
100	24 (7)	38 (12)	59 (18)	153 (47)

6 Cable Diameter (12V DC) and Transmission Distance

The recommended transmission distances are for reference only, and the actual conditions shall prevail. The following table shows the maximum transmission distance of cables with certain diameter when the 12V DC power source voltage loss rate is below 10%.
For devices powered by direct current, the maximum voltage loss rate allowed is 10%. The cables mentioned in the following table are all copper cables with electrical resistivity $\rho = 0.0175\Omega \times \mathrm{mm}^2/\mathrm{m}$.



In the following table, the unit for diameter is mm, and the unit for transmission distance is foot (m).

Table 6-1 Cable diameter (12V DC) and transmission distance

Transmission Power (W)	Transmission Distance (Diameter: 0.80)	Transmission Distance (Diameter: 1.00)	Transmission Distance (Diameter: 1.25)	Transmission Distance (Diameter: 2.00)
5	122 (37)	191 (58)	298 (91)	763 (233)
10	61 (19)	95 (29)	149 (45)	382 (116)
15	41 (12)	64 (20)	99 (30)	254 (77)
20	31 (9)	48 (15)	75 (23)	191 (58)
25	24 (7)	38 (12)	59 (18)	153 (47)
30	20 (6)	32 (10)	50 (15)	127 (39)
35	17 (5)	27 (8)	43 (13)	109 (33)
40	15 (5)	23 (7)	37 (11)	95 (29)
45	14 (4)	21 (6)	33 (10)	85 (26)
50	12 (4)	19 (6)	30 (9)	76 (23)
55	11 (3)	17 (5)	27 (8)	69 (21)
60	10 (3)	16 (5)	25 (8)	64 (20)
65	9 (3)	15 (5)	23 (7)	59 (18)
70	9 (3)	14 (4)	21 (6)	55 (17)
75	8 (2)	13 (4)	20 (6)	51 (16)
80	8 (2)	12 (4)	19 (6)	48 (15)
85	7 (2)	11 (3)	18 (5)	45 (14)
90	7 (2)	11 (3)	17 (5)	42 (13)
95	6 (2)	10 (3)	16 (5)	40 (12)
100	6 (2)	10 (3)	15 (5)	38 (12)

7 Cable Diameter (24V DC) and Transmission Distance

The recommended transmission distances are for reference only, and the actual conditions shall prevail. The following table shows the maximum transmission distance of cables with certain diameter when the 24V DC power source voltage loss rate is below 10%.
For devices powered by direct current, the maximum voltage loss rate allowed is 10%. The cables mentioned in the following table are all copper cables with electrical resistivity $\rho = 0.0175\Omega \times \mathrm{mm}^2/\mathrm{m}$.



In the following table, the unit for diameter is mm, and the unit for transmission distance is foot (m).

Table 7-1 Cable diameter (24V DC) and transmission distance

Transmission Power (W)	Transmission Distance (Diameter: 0.80)	Transmission Distance (Diameter: 1.00)	Transmission Distance (Diameter: 1.25)	Transmission Distance (Diameter: 2.00)
5	489 (149)	763 (233)	1193 (364)	3053 (931)
10	244 (74)	382 (116)	596 (182)	1527 (465)
15	163 (50)	254 (77)	398 (121)	1018 (310)
20	122 (37)	191 (58)	298 (91)	763 (233)
25	98 (30)	153 (47)	239 (73)	611 (186)
30	81 (25)	127 (39)	199 (61)	509 (155)
35	70 (21)	109 (33)	170 (52)	436 (133)
40	61 (19)	95 (29)	149 (45)	382 (116)
45	54 (16)	85 (26)	133 (41)	339 (103)
50	49 (15)	76 (23)	119 (36)	305 (93)
55	44 (13)	69 (21)	108 (33)	278 (85)
60	41 (12)	64 (20)	99 (30)	254 (77)
65	38 (12)	59 (18)	92 (28)	235 (72)
70	35 (11)	55 (17)	85 (26)	218 (66)
75	33 (10)	51 (16)	80 (24)	204 (62)
80	31 (9)	48 (15)	75 (23)	191 (58)
85	29 (9)	45 (14)	70 (21)	180 (55)
90	27 (8)	42 (13)	66 (20)	170 (52)
95	26 (8)	40 (12)	63 (19)	161 (49)
100	24 (7)	38 (12)	60 (18)	153 (47)

8 Cable Diameter (30V DC) and Transmission Distance

The recommended transmission distances are for reference only, and the actual conditions shall prevail. The following table shows the maximum transmission distance of cables with certain diameter when the 30V DC power source voltage loss rate is below 20%.
For devices powered by direct current, the maximum voltage loss rate allowed is 20%. For example, when a device of 150W rated power is installed 45 feet (14 m) away from the transformer, the minimum diameter needed is 0.80 mm.



In the following table, the unit for diameter is mm, and the unit for transmission distance is foot (m).

Table 8-1 Cable diameter (36V DC) and transmission distance

Transmission Power (W)	Transmission Distance (Diameter: 0.80)	Transmission Distance (Diameter: 1.00)	Transmission Distance (Diameter: 1.25)	Transmission Distance (Diameter: 2.00)
5	1357 (414)	2120 (646)	3313 (1010)	8481 (2585)
10	678 (207)	1060 (323)	1656 (505)	4241 (1293)
15	452 (138)	707 (215)	1104 (336)	2827 (862)
20	339 (103)	530 (162)	828 (252)	2120 (646)
25	271 (83)	424 (129)	663 (202)	1696 (517)
30	226 (69)	353 (108)	552 (168)	1414 (431)
35	194 (59)	303 (92)	473 (144)	1212 (369)
40	170 (52)	265 (81)	414 (126)	1060 (323)
45	151 (46)	236 (72)	368 (112)	942 (287)
50	136 (41)	212 (65)	331 (101)	848 (258)
55	123 (37)	193 (59)	301 (92)	771 (235)
60	113 (34)	177 (54)	276 (84)	707 (215)
65	104 (32)	163 (50)	255 (78)	652 (199)
70	97 (30)	151 (46)	237 (72)	606 (185)
75	90 (27)	141 (43)	221 (67)	565 (172)
80	85 (26)	133 (41)	207 (63)	530 (162)
85	80 (24)	125 (38)	195 (59)	499 (152)
90	75 (23)	118 (36)	184 (56)	471 (144)
95	71 (22)	112 (34)	174 (53)	446 (136)
100	68 (21)	106 (32)	166 (51)	424 (129)
100	68 (21)	106 (32)	166 (51)	424 (129)
110	62 (19)	96 (29)	151 (46)	386 (118)

Transmission Power (W)	Transmission Distance (Diameter: 0.80)	Transmission Distance (Diameter: 1.00)	Transmission Distance (Diameter: 1.25)	Transmission Distance (Diameter: 2.00)
120	57 (17)	88 (27)	138 (42)	353 (108)
130	52 (16)	82 (25)	127 (39)	326 (99)
140	48 (15)	76 (23)	118 (36)	303 (92)
150	45 (14)	71 (22)	110 (34)	283 (86)
160	42 (13)	66 (20)	104 (32)	265 (81)
170	40 (12)	62 (19)	97 (30)	249 (76)
180	38 (12)	59 (18)	92 (28)	236 (72)
190	36 (11)	56 (17)	87 (27)	223 (68)
200	34 (10)	53 (16)	83 (25)	212 (65)

9 Cable Diameter (36V DC) and Transmission Distance

The recommended transmission distances are for reference only, and the actual conditions shall prevail. The following table shows the maximum transmission distance of cables with certain diameter when the 36V DC power source voltage loss rate is below 25%.
For devices powered by direct current, the maximum voltage loss rate allowed is 25%. For example, when a device of 150W rated power is installed 76 feet (23 m) away from the transformer, the minimum diameter needed is 0.80 mm.



In the following table, the unit for diameter is mm, and the unit for transmission distance is foot (m).

Table 9-1 Cable diameter (36V DC) and transmission distance

Transmission Power (W)	Transmission Distance (Diameter: 0.80)	Transmission Distance (Diameter: 1.00)	Transmission Distance (Diameter: 1.25)	Transmission Distance (Diameter: 2.00)
5	2290 (698)	3578 (1091)	5591 (1704)	14312 (4362)
10	1145 (349)	1789 (545)	2795 (852)	7156 (2181)
15	763 (233)	1193 (364)	1864 (568)	4771 (1454)
20	572 (174)	895 (273)	1398 (426)	3578 (1091)
25	458 (140)	716 (218)	1118 (341)	2862 (872)
30	382 (116)	596 (182)	932 (284)	2385 (727)
35	327 (100)	511 (156)	799 (244)	2045 (623)
40	286 (87)	447 (136)	699 (213)	1789 (545)
45	254 (77)	398 (121)	621 (189)	1590 (485)
50	229 (70)	358 (109)	559 (170)	1431 (436)
55	208 (63)	325 (99)	508 (155)	1301 (397)
60	191 (58)	298 (91)	466 (142)	1193 (364)
65	176 (54)	275 (84)	430 (131)	1101 (336)
70	164 (50)	256 (78)	399 (122)	1022 (312)
75	153 (47)	239 (73)	373 (114)	954 (291)
80	143 (44)	224 (68)	349 (106)	895 (273)
85	135 (41)	210 (64)	329 (100)	842 (257)
90	127 (39)	199 (61)	311 (95)	795 (242)
95	121 (37)	188 (57)	294 (90)	753 (230)
100	114 (35)	179 (55)	280 (85)	716 (218)
110	104 (32)	163 (50)	254 (77)	651 (198)
120	95 (29)	149 (45)	233 (71)	596 (182)

Transmission Power (W)	Transmission Distance (Diameter: 0.80)	Transmission Distance (Diameter: 1.00)	Transmission Distance (Diameter: 1.25)	Transmission Distance (Diameter: 2.00)
130	88 (27)	138 (42)	215 (66)	550 (168)
140	82 (25)	128 (39)	200 (61)	511 (156)
150	76 (23)	119 (36)	186 (57)	477 (145)
160	72 (22)	112 (34)	175 (53)	447 (136)
170	67 (20)	105 (32)	164 (50)	421 (128)
180	64 (20)	99 (30)	155 (47)	398 (121)
190	60 (18)	94 (29)	147 (45)	377 (115)
200	57 (17)	89 (27)	140 (43)	358 (109)

10 Wire Gauge Reference Sheet

Metric Bare Wire Diameter (mm)	AWG	SWG	Bare Wire Cross Section Area (mm^2)
0.050	43	47	0.00196
0.060	42	46	0.00283
0.070	41	45	0.00385
0.080	40	44	0.00503
0.090	39	43	0.00636
0.100	38	42	0.00785
0.110	37	41	0.00950
0.130	36	39	0.01327
0.140	35	/	0.01539
0.160	34	37	0.02011
0.180	33	/	0.02545
0.200	32	35	0.03142
0.230	31	/	0.04115
0.250	30	33	0.04909
0.290	29	31	0.06605
0.330	28	30	0.08553
0.350	27	29	0.09621
0.400	26	28	0.1257
0.450	25	/	0.1602
0.560	24	24	0.2463
0.600	23	23	0.2827
0.710	22	22	0.3958
0.750	21	/	0.4417
0.800	20	21	0.5027
0.900	19	20	0.6362
1.000	18	19	0.7854
1.250	16	18	1.2266
1.500	15	/	1.7663
2.000	12	14	3.1420
2.500	/	/	4.9080
3.000	/	/	7.0683

Appendix 1 Cybersecurity Recommendations

Cybersecurity is more than just a buzzword: it's something that pertains to every device that is connected to the internet. IP video surveillance is not immune to cyber risks, but taking basic steps toward protecting and strengthening networks and networked appliances will make them less susceptible to attacks. Below are some tips and recommendations on how to create a more secured security system.

Mandatory actions to be taken for basic equipment network security:

1. **Use Strong Passwords**

   Please refer to the following suggestions to set passwords:

   - The length should not be less than 8 characters;
   - Include at least two types of characters; character types include upper and lower case letters, numbers and symbols;
   - Do not contain the account name or the account name in reverse order;
   - Do not use continuous characters, such as 123, abc, etc.;
   - Do not use overlapped characters, such as 111, aaa, etc.;

2. **Update Firmware and Client Software in Time**

   - According to the standard procedure in Tech-industry, we recommend to keep your equipment (such as NVR, DVR, IP camera, etc.) firmware up-to-date to ensure the system is equipped with the latest security patches and fixes. When the equipment is connected to the public network, it is recommended to enable the "auto-check for updates" function to obtain timely information of firmware updates released by the manufacturer.
   - We suggest that you download and use the latest version of client software.

"Nice to have" recommendations to improve your equipment network security:

1. **Physical Protection**

   We suggest that you perform physical protection to equipment, especially storage devices. For example, place the equipment in a special computer room and cabinet, and implement well-done access control permission and key management to prevent unauthorized personnel from carrying out physical contacts such as damaging hardware, unauthorized connection of removable equipment (such as USB flash disk, serial port), etc.

2. **Change Passwords Regularly**

   We suggest that you change passwords regularly to reduce the risk of being guessed or cracked.

3. **Set and Update Passwords Reset Information Timely**

   The equipment supports password reset function. Please set up related information for password reset in time, including the end user's mailbox and password protection questions. If the information changes, please modify it in time. When setting password protection questions, it is suggested not to use those that can be easily guessed.

4. **Enable Account Lock**

   The account lock feature is enabled by default, and we recommend you to keep it on to guarantee the account security. If an attacker attempts to log in with the wrong password several times, the corresponding account and the source IP address will be locked.

5. **Change Default HTTP and Other Service Ports**

   We suggest you to change default HTTP and other service ports into any set of numbers between 1024~65535, reducing the risk of outsiders being able to guess which ports you are using.

6. **Enable HTTPS**
   We suggest you to enable HTTPS, so that you visit Web service through a secure communication channel.
7. **Enable Whitelist**
   We suggest you to enable whitelist function to prevent everyone, except those with specified IP addresses, from accessing the system. Therefore, please be sure to add your computer's IP address and the accompanying equipment's IP address to the whitelist.
8. **MAC Address Binding**
   We recommend you to bind the IP and MAC address of the gateway to the equipment, thus reducing the risk of ARP spoofing.
9. **Assign Accounts and Privileges Reasonably**
   According to business and management requirements, reasonably add users and assign a minimum set of permissions to them.
10. **Disable Unnecessary Services and Choose Secure Modes**
    If not needed, it is recommended to turn off some services such as SNMP, SMTP, UPnP, etc., to reduce risks.
    If necessary, it is highly recommended that you use safe modes, including but not limited to the following services:
    - SNMP: Choose SNMP v3, and set up strong encryption passwords and authentication passwords.
    - SMTP: Choose TLS to access mailbox server.
    - FTP: Choose SFTP, and set up strong passwords.
    - AP hotspot: Choose WPA2-PSK encryption mode, and set up strong passwords.
11. **Audio and Video Encrypted Transmission**
    If your audio and video data contents are very important or sensitive, we recommend that you use encrypted transmission function, to reduce the risk of audio and video data being stolen during transmission.
    Reminder: encrypted transmission will cause some loss in transmission efficiency.
12. **Secure Auditing**
    - Check online users: we suggest that you check online users regularly to see if the device is logged in without authorization.
    - Check equipment log: By viewing the logs, you can know the IP addresses that were used to log in to your devices and their key operations.
13. **Network Log**
    Due to the limited storage capacity of the equipment, the stored log is limited. If you need to save the log for a long time, it is recommended that you enable the network log function to ensure that the critical logs are synchronized to the network log server for tracing.
14. **Construct a Safe Network Environment**
    In order to better ensure the safety of equipment and reduce potential cyber risks, we recommend:
    - Disable the port mapping function of the router to avoid direct access to the intranet devices from external network.
    - The network should be partitioned and isolated according to the actual network needs. If there are no communication requirements between two sub networks, it is suggested to use VLAN, network GAP and other technologies to partition the network, so as to achieve the network isolation effect.

- Establish the 802.1x access authentication system to reduce the risk of unauthorized access to private networks.