DHI-ARB1608-N

Dahua Alarm Box

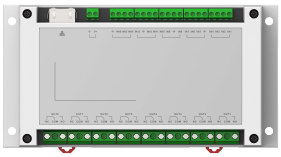

- Linked alarm output ports support being turned on and off in cycles based on their configuration.
- Linked alarm output ports can be grouped, and then turned on and off in cycles based on their configuration.
- Supports scheduling arming and disarming periods for workdays and holidays.
- Alarm input can have as many as 50 HTTP commands. Each can be turned on or off separately, allowing multiple commands to be executed when an alarm is triggered.

Series Overview

The Network Alarm Box is a standalone IP-based device that extends alarm signal integration. It provides scalable alarm I/O ports and a user-friendly web interface for easy configuration. Its dual-mode design allows for instant local response and advanced alarm linkage by integrating with an NVR. Free from the limit of physical ports, it provides flexible network-based deployment and scalable security solutions.

Technical Specification

Port

Alarm Input	16 channels
Alarm Output	8 channels
Network Port	1 (10/100 Mbps Ethernet port, RJ-45)

General

Power Supply	12 VDC, 1 A. Supports PoE power supply.
Power Consumption	<12W
Net Weight	0.27 kg (0.60 lb)
Gross Weight	0.60 kg (1.32 lb)
Product Dimensions	176.4 mm × 91.4 mm × 40.4 mm (6.94" × 3.60" × 1.59") (W × D × H)
Packaging Dimensions	223.0 mm × 214.0 mm × 91.0 mm (8.78" × 8.43" × 3.58") (W × D × H)
Operating Temperature	–10 °C to +55 °C (+14 °F to +131 °F)
Storage Temperature	–20 °C to +60 °C (–4 °F to +140 °F)
Operating Humidity	10%–93% (RH), non-condensing
Certifications	CE

Ordering Information

Type	Model	Description
Alarm Repeater	DHI-ARB1608-N	Dahua Alarm Box

Installation

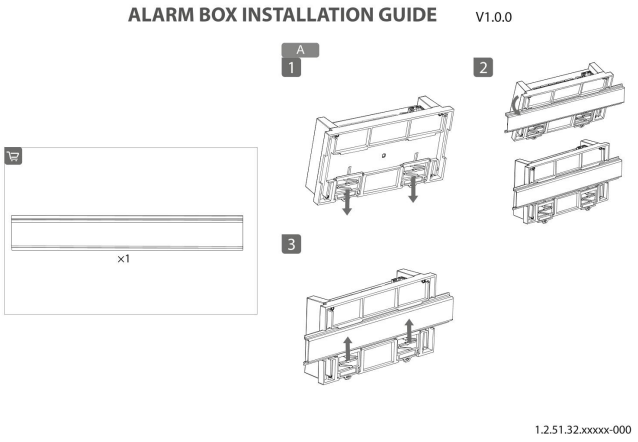

Dimensions (mm[inch])

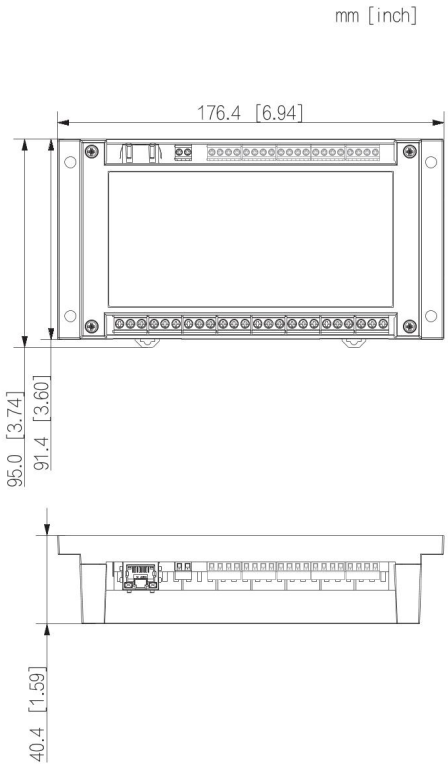

Panels

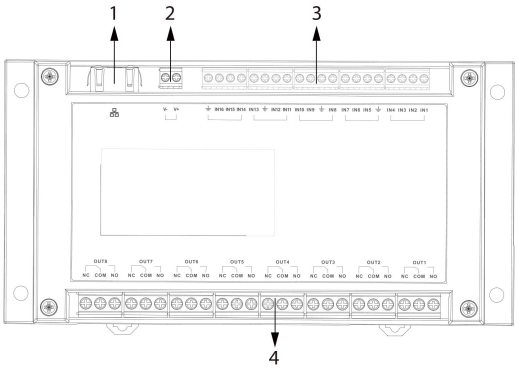

1 Network Port

2 Power Input

3 Alarm Input

4 Alarm Output

©Dahua. All rights reserved. Design and specifications are subject to change without notice.
Pictures in the document are for reference only, and the actual product shall prevail.